CONTENTS

Ⅰ. SPECIFICATION

1. SPECIFICATION ····· 2
2. SYSTEM REQUIRMENT ····· 2
3. TN LCD PANEL MARK ····· 3
4. TFT LCD PANEL MARK ····· 4
5. CONNECTION DIAGRAM ····· 5
6. PRODUCT EXTERIOR ····· 6

Ⅱ. EXPLODED VIEW AND PARTS LIST

1. FRONT COVER ASSEMBLY ····· 8
2. BODY ASSEMBLY ····· 10
3. BACK COVER ASSEMBLY ····· 12
4. PACKING ITEM ····· 14

Ⅲ. ADJSUTMENT

1. REPLACEMENT PARTS AND ADJUSTMENT ITEMS ····· 16
2. ADJUSTMENT TOOLS ····· 16
3. OPERATION INSPECTION ····· 16
2. ADJUSTMENT ITEMS
   1) AE ADJUSTMENT ····· 17
   2) AWB ADJUSTMENT ····· 18
   3) AF ADJUSTMENT ····· 19
   4) FLASH ADJUSTMENT ····· 20

Ⅳ. PRODUCTS CONSTRUCTION

1. INTERCONNECTION DIAGRAM ····· 21
2. PARTS ARRANGEMENT FOR EACH PCB ASS'Y
   1) MAIN PCB ASSEMBLY ····· 22
   2) POWER PCB ASSEMBLY ····· 24
   3) TOP PCB ASSEMBLY ····· 26
   4) CCD F PCB ASSEMBLY ····· 27

Ⅴ. ADJUSTMENT TOOL ····· 28

Ⅰ. SPECIFICATIONS

1. Specifications

Image Sensor	1/2.7" CCD Seneor with 2.1Mega pixels(Effective no. of pixels:2.0M)
Lens	f= 5.2~15.6mm(35mm film equivalent : 34 ~ 102mm) F 2.4 ~ F4.0
Digital Zoom	Record mode : 2X, Play mode : 2X
Viewfinder	Real image optical viewfinder
LCD Monitor	1.6" color TFT LCD
Focusing	TTL Auto focus (Central/Spot)
Focus distance	Normal : 0.8m ~ Infinity, Macro : 0.2m ~ 0.8m
Shutter	Mechanical and Electronic shutter
Shutter Speed	1 ~ 1/3,200sec.
Exposure	Program AE(Full/Central/Spot)
Exposure compensation	±2EV (0.5EV steps)
ISO Equivalent	Auto, 200, 400
Flash	Auto & Red-eye reduction/Slow Sinc/Auto/Fill-in flash/Flash off
Flash Range	Wide : 0.5m ~ 3.0m, Tele : 0.5m ~ 2.0m
Flash Charging time	Approx 7sec.
Sharpness	Soft/Normal/Hard
White Balance	Auto/Daylight/Fluorescent/Tungsten
Voice memo	Voice recording and play back for still image
Driver Mode	Single / Continuous /
Movie clip	Size : 320x240, recording time : 5~30sec.(5sec. steps)
Self-timer	10sec.
Storage	CompactFlash Card
FIle Format	Still image : JPEG(DCF compliant), DPOF compliant Movie clip : AVI(MJPEG)
Image Size	Large : 1600x1200 pixels, Medium : 800x600 pixels Small : 640x480 pixels
Stroge Capacity (8MB/16MB)	Large : Super fine 6/12, FIne : 12/25, Normal : 25/51 Medium : Super fine 19/38, FIne : 38/77, Normal : 77/155 Small : Super fine 38/77, FIne : 61/124, Normal : 90/182
Image Play	Single image / Thumbnail / Slide show
Interface	Digital output connector : USB Video output : NTSC / PAL (user selectable) DC power input connector : 6.0V
Power Source	4 X AA alkaline(high capacity recommended) / Ni-MH batteries. AC adapter (optional)
Dimensions(WxHxD)	113x65x48mm
Weight	210g (without batteries and card)
Software	Camera driver : Storage Driver(WIN 98/98SE/2000/ME/XP) Application : MGI PhotoSuite, Digimax viewer

※ Storage capacity figures are measured under Samsung's standard conditions and may vary depending on shooting conditions and camera settings.

2. System requirement

FOR WINDOWS	
	Windows 98, 98SE, ME, 2000, XP PC with processor better than MMX Pentium 233MHZ(XP:Pentium II 300MHz) Min. 32MB of RAM(XP : 128MB) 110MB of available harddisk space USB port CD-ROM Driver 800X600 pixels, 16bits color display compatible monitor (24bit color display adaptor, True color display recommended)
FOR MACINTOSH	
	Power Mac G3 or later OS 9.0 or later Min 32MB RAM 110MB of available harddisk space USB port CD-ROM Driver Quick Time 4.0 or later for Movie Clip.

Specifications are subject to change without prior notice.

3. TN LCD Panel Mark

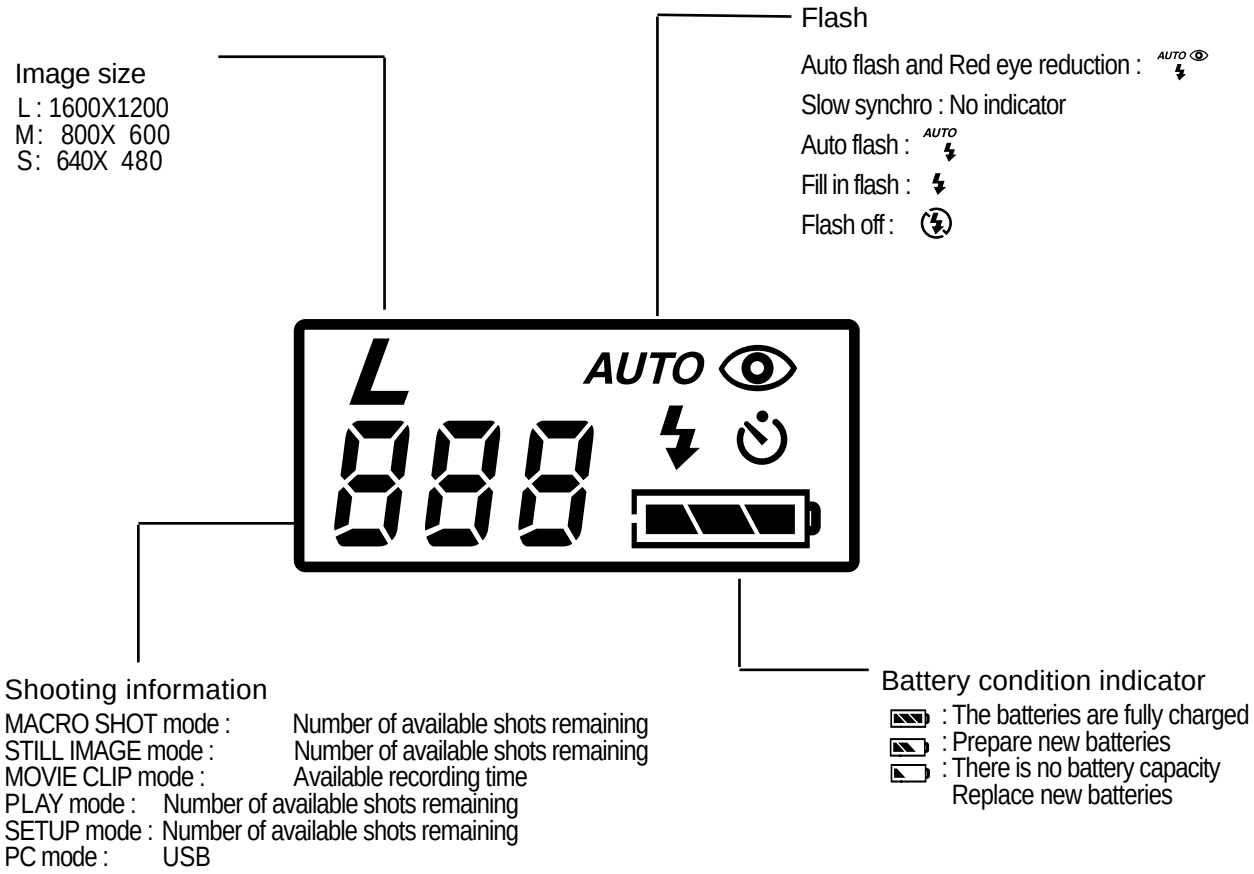

4. TFT LCD Panel Mark

■ SHOT mode

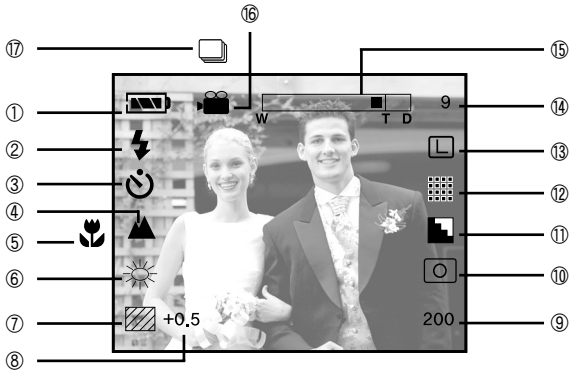

■ PLAY mode

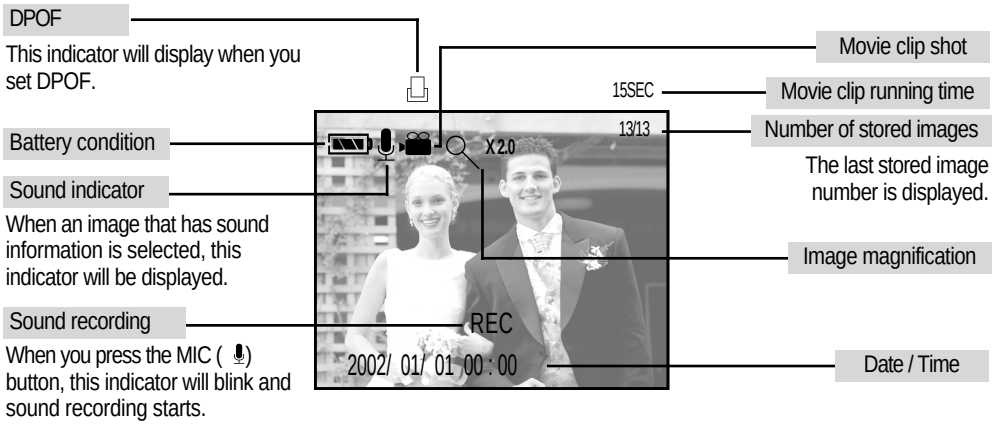

1	Battery condition		
2	Flash		
3	Self-timer		
4	Landscape shot		
5	Macro shot		
6	White balance	A	
7	Metering methods		
8	Exposure compensation	-2.0 ~ 0 ~ +2.0	
9	ISO	AUTO 200 400	
10	Focusing Methods		
11	Sharpness		
12	Image quality		
13	Image size	L M S	
14	Number of available shots remaining	9	
15	Zoom / Digital zoom	W T D	
16	Movie clip shot		
17	Shooting mode		

5. CONNECTION DIAGRAM

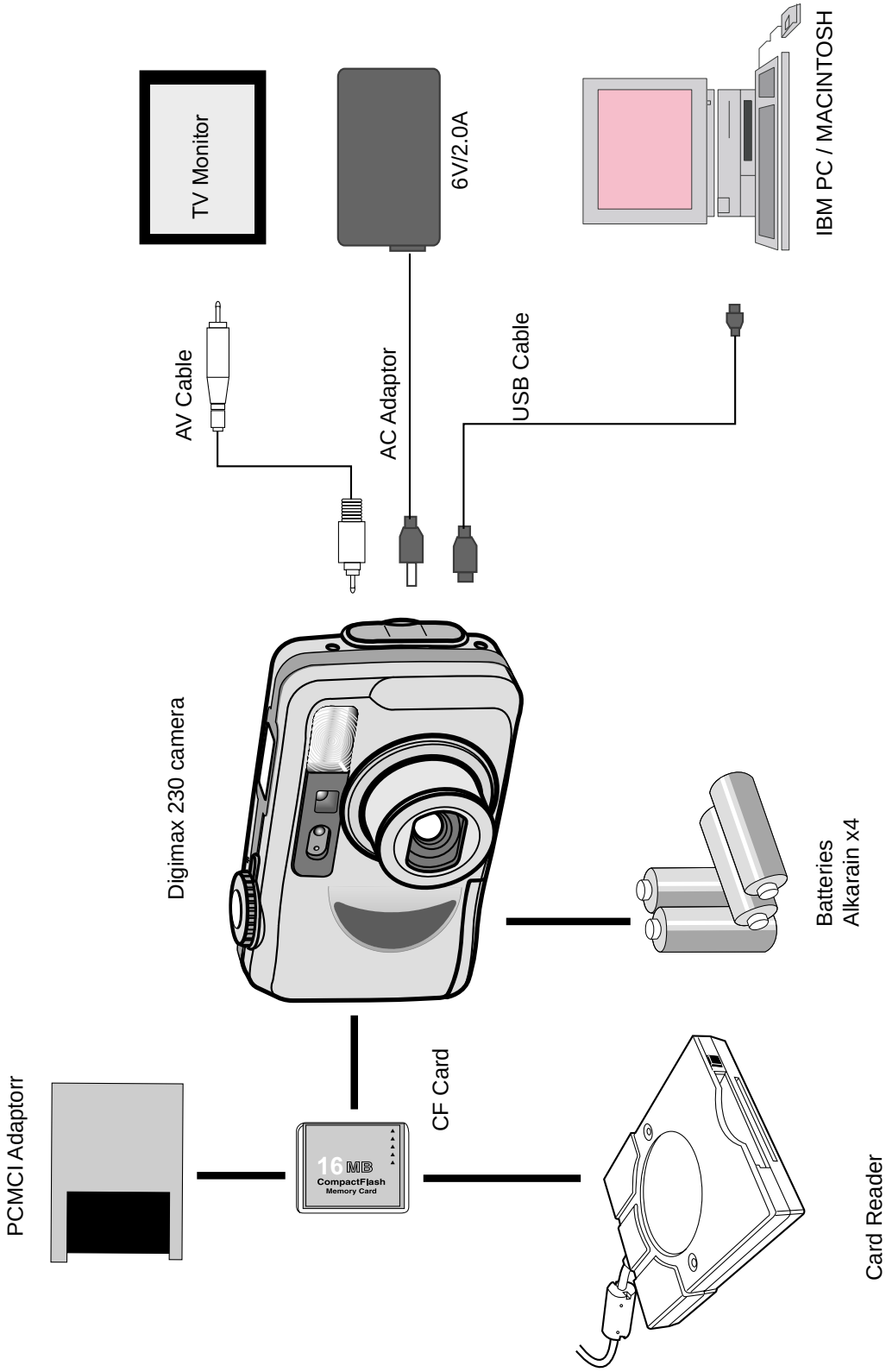

6. Product Exterior

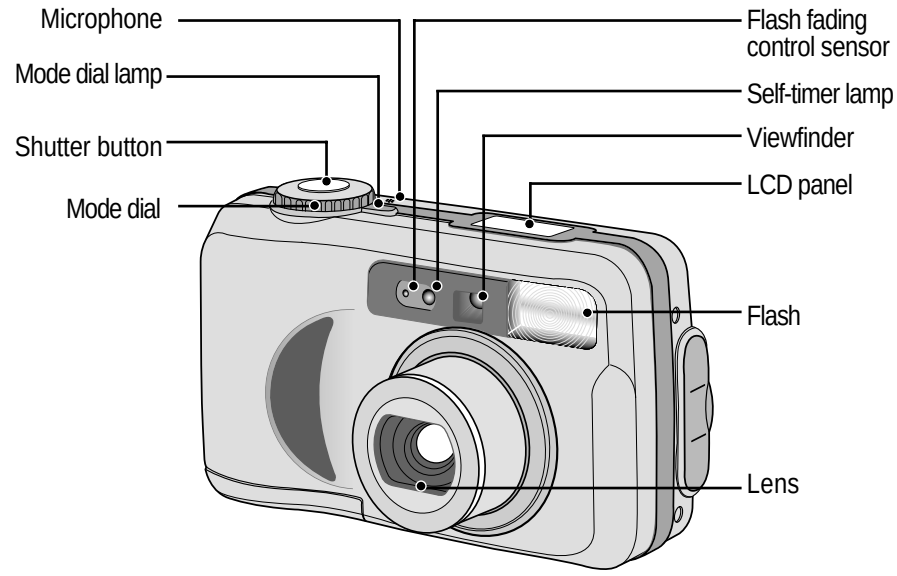

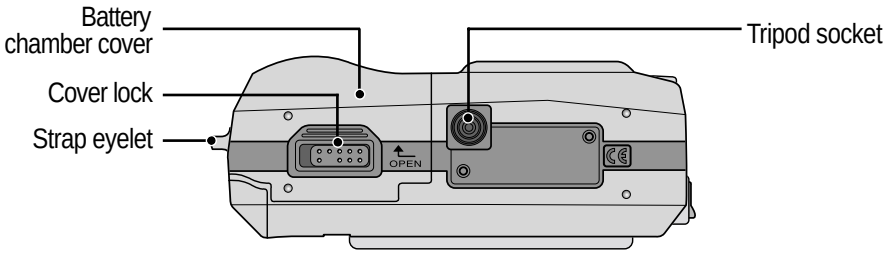

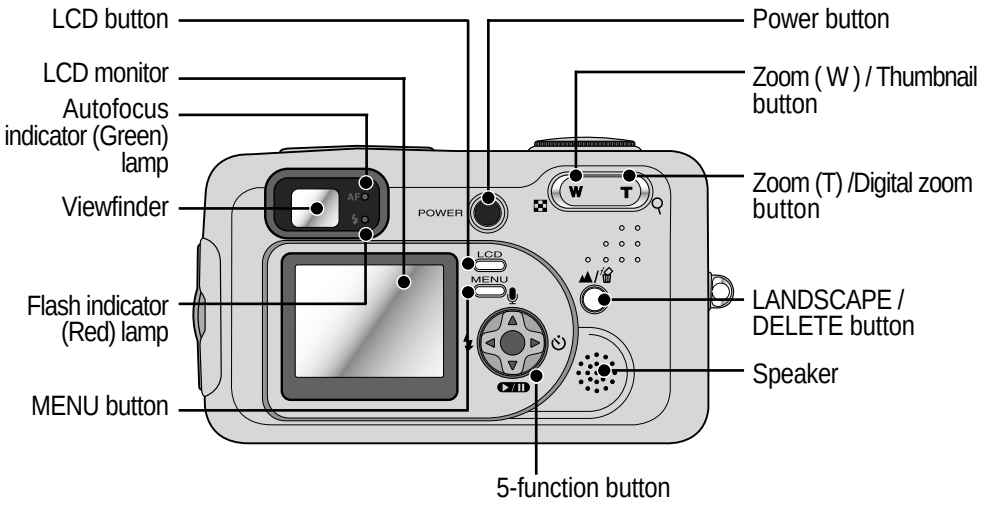
LCD button
LCD monitor
Autofocus indicator (Green) lamp
Viewfinder
Flash indicator (Red) lamp
MENU button
Power button
Zoom (W) / Thumbnail button
Zoom (T) /Digital zoom button
LANDSCAPE / DELETE button
Speaker
5-function button
POWER
LCD
MENU
W
T
AF

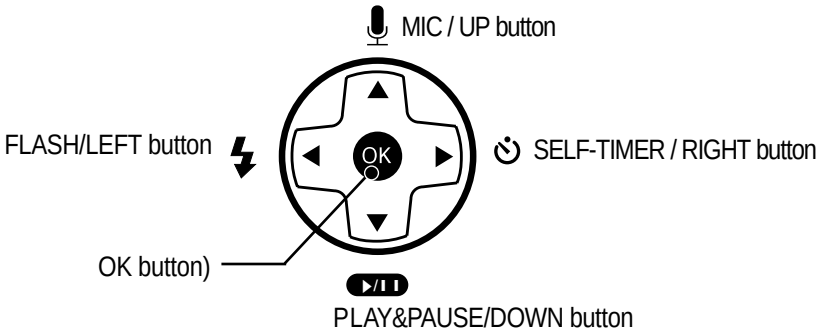
MIC / UP button
FLASH/LEFT button
SELF-TIMER / RIGHT button
OK button)
PLAY&PAUSE/DOWN button
OK

7

II. EXPLODED VIEWS AND PARTS LIST

1. FRONT COVER

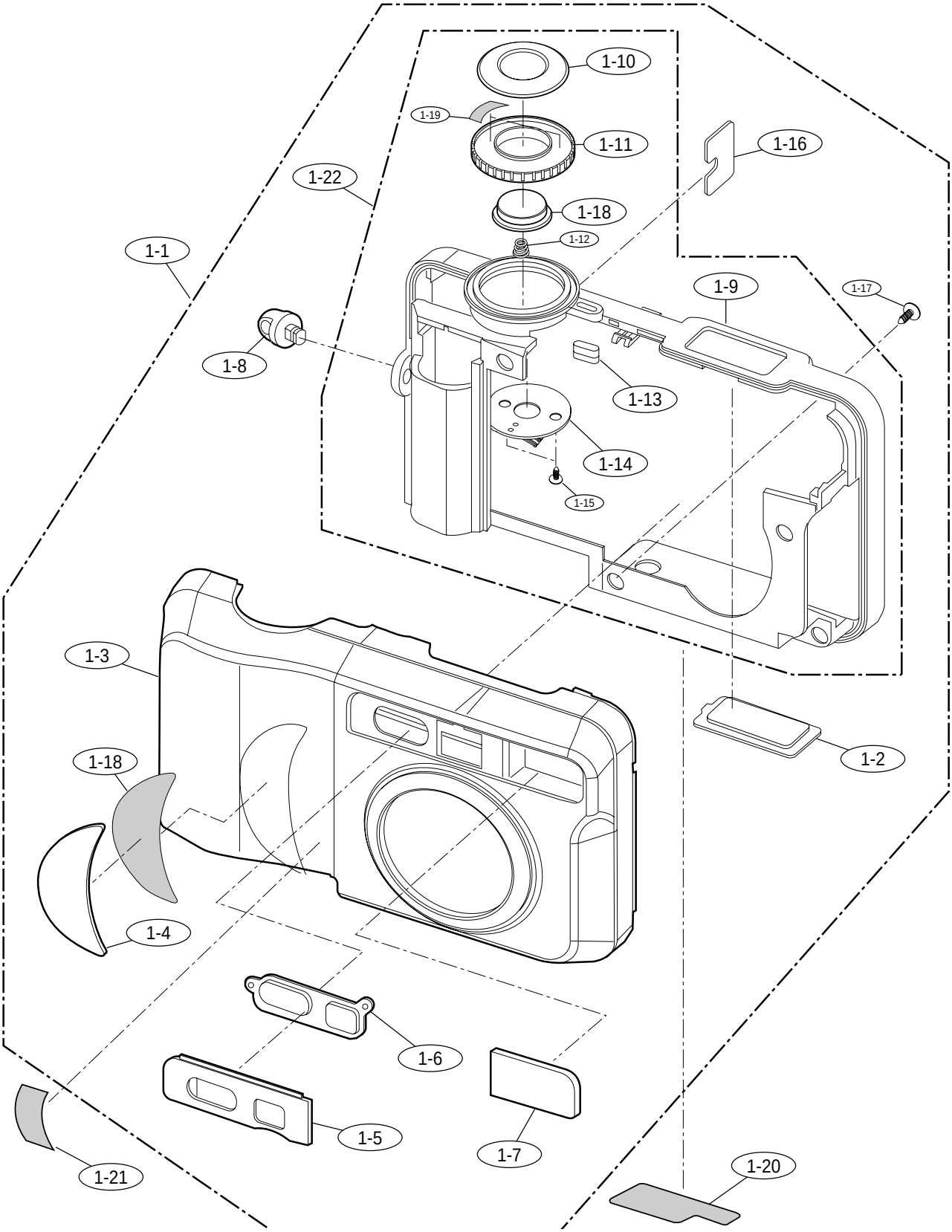

▶ PARTS LIST

Fig.No.	Parts No.	Parts Name	Q'ty	Remarks
1-1	9007-1818-01A	FRONT COVER ASS'Y (DIGIMAX 230)	1	
	9007-1828-01A	FRONT COVER ASS'Y (KENOX DIGIMAX 230)	1	
	9007-1829-01A	FRONT COVER ASS'Y (CYBERMAX 2000)	1	
1-2	7217-2587-01A	TOP LCD WINDOW	1	
1-3	7217-2585-01A	FRONT COVER (DIGIMAX 230)	1	
	7217-2636-01A	FRONT COVER (KENOX DIGIMAX 230)	1	
	7217-2637-01A	FRONT COVER (CYBERMAX 2000)	1	
1-4	7308-0135-01A	GRIP RUBBER	1	
1-5	7217258901A	FINDER WINDOW A	1	
1-6	7217-2638-01A	FINDER WINDOW B	1	
1-7	7217-2590-01A	STROBE WINDOW	1	
1-8	7411-0953-01A	STRAP RING	1	
1-9	7217-2588-01A	CENTRAL DECORATION BAR	1	
1-10	7217-2594-01A	FD COVER	1	
1-11	7217-2592-01A	FD HOLDER	1	
1-12	6107-0512-01A	SB BUTTON SP	1	
1-13	7217-2639-01A	LED WINDOW	1	
1-14	9007-1830-01A	FD PLATE ASS'Y	1	
1-15	6003-0350-01A	SCREW	8	
1-16	7017-0349-01A	STRAP RING HOLDER	1	
1-17	7217-2591-01A	SB BUTTON	1	
1-18	7409-1312-01A	DOUBLE TAPE-GRIP	1	
1-19	7409-1313-01A	DOUBLE TAPE	2	
1-20	7409-1257-01A	FFC LABEL(MADE IN CHINA)	1	
	7409-1258-01A	FCC LABEL(NO MARKING)	1	
1-21	7409-1259-01A	MIC LABEL	1	
1-22	9002-1126-01A	CENTRAL DECORATION BAR ASS'Y	1	

2. BODY

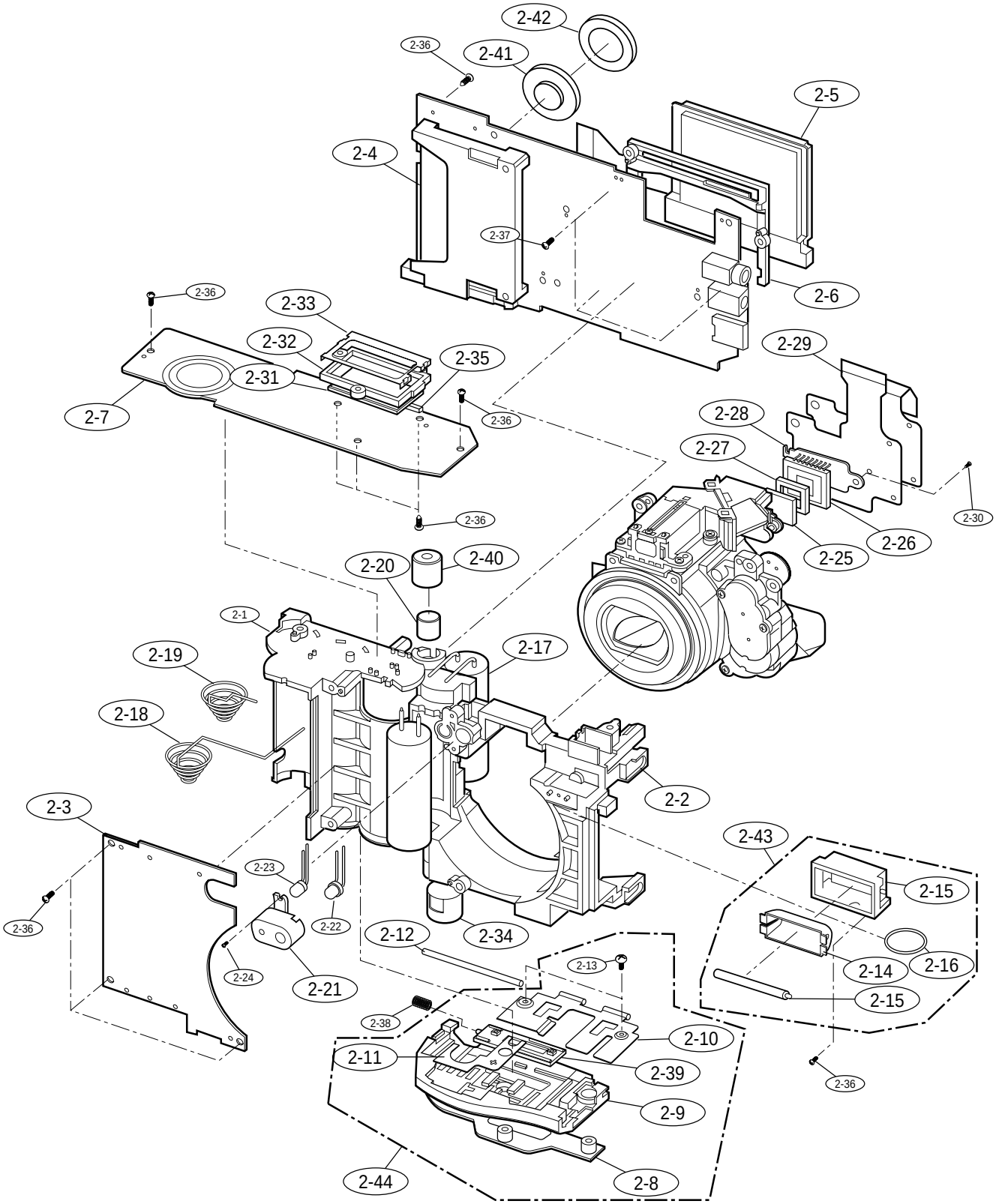
2-42
2-36
2-41
2-5
2-4
2-37
2-6
2-36
2-33
2-32
2-35
2-29
2-31
2-7
2-36
2-28
2-27
2-30
2-36
2-26
2-25
2-20
2-40
2-1
2-17
2-19
2-18
2-2
2-3
2-43
2-23
2-15
2-36
2-22
2-12
2-34
2-16
2-13
2-14
2-24
2-21
2-15
2-38
2-10
2-11
2-39
2-36
2-9
2-44
2-8

▶ PARTS LIST

Fig.No.	Parts No.	Parts Name	Q'ty	Remarks
2-1	7211-0653-01A	BODY	1	
2-2	9002-1015-01A	BARREL ASS'Y	1	
2-3	9008-0536-01A	POWER PCB ASS'Y	1	
2-4	9010-0460-01A	DIGITAL BOARD ASS'Y	1	
2-5	0704-0082-01A	TFT LCD PANEL	1	
2-6	7211-0652-01A	TFT LCD HOLDER	1	
2-7	9008-0537-01A	TOP PCB ASS'Y	1	
2-8	7411-0954-01A	BATTERY DECORATION BAR	1	
2-9	7017-0351-01A	BATTERY COVER	1	
2-10	7011-0422-01A	BATTERY CONTACT-A	1	
2-11	7011-0423-01A	BATTERY CONTACT-B	1	
2-12	7411-0952-01A	BATTERY COVER HINGE	1	
2-13	6003-0355-01A	SCREW	2	
2-14	7211-0655-01A	REFLECTOR HOLDER	1	
2-15	0611-0029-01A	FLASH TUBEL	1	
2-16	7211-0656-01A	REFLECTOR HOLDER	1	
2-17	2203-0175-01A	CAP ELEC	2	
2-18	7011-0424-01A	BATTERY CONTACT A	1	
2-19	7011-0425-01A	BATTERY CONTACT B	1	
2-20	0902-0067-01A	MIC	1	
2-21	7211-0654-01A	IGBT HOLDER	1	
2-22	0601-0044-01A	LED (RED)	1	
2-23	1407-0005-01A	IGBT	1	
2-24	6003-0357-01A	SCREW	2	
2-25	6739-0005-01A	OLPF	1	
2-26	0604-0010-01A	CCD SENSOR IC	1	
2-27	7309-0380-01A	LPF SILICON RUBBER	1	
2-28	6735-0022-01A	LOW PASS FILTER	1	
2-29	9008-0539-01A	CCD FPC PCB ASS'Y	1	
2-30	6003-0353-01A	SCREW	2	
2-31	0704-0084-01A	TOP LCD	1	
2-32	7217-2640-01A	TOP LCD HOLDER	1	
2-33	7217-0641-01A	TOP LCD FRAME	1	
2-34	7217-2584-01A	TRIPOD CONNECTOR	1	
2-35	7308-0138-01A	TOP LCD RUBBER	1	
2-36	6003-0347-01A	SCREW	10	
2-37	6003-0351-01A	SCREW	3	
2-38	6107-0513-01A	BATTERY COVER SP	1	
2-39	7217-2595-01A	BATTERY COVER BUTTON	1	
2-40	7309-0378-01A	MIC RUBBER	1	
2-41	0902-0068-01A	MICRO SPERKER	1	
2-42	7309-0379-01A	SPEAKER RUBBER	1	
2-43	9001-0921-01A	REFLECTOR ASS'Y	1	
2-44	9007-1820-01A	BATTERY COVER ASS'Y	1	

3. BACK COVER

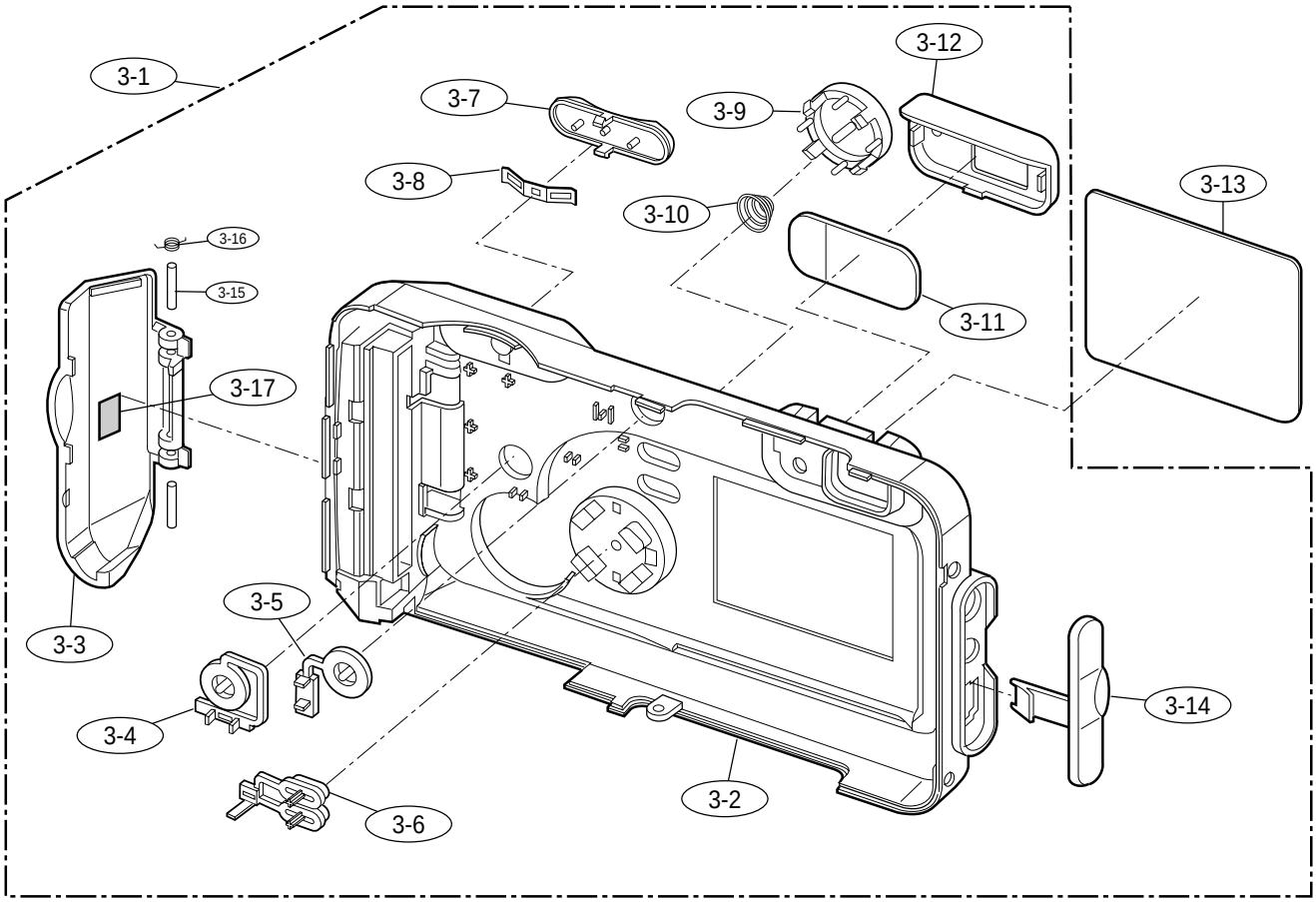

▶ PARTS LIST

Fig.No.	Parts No.	Parts Name	Q'ty	Remarks
3-1	9007-1819-01A	BACK COVER ASS℃ØY	1	
3-2	7217-2596-01A	BACK COVER	1	
3-3	7217-2597-01A	CF COVER	1	
3-4	7217-2602-01A	MODE BUTTON	1	
3-5	7217-2598-01A	POWER BUTTON	1	
3-6	7217-2603-01A	LCD-MODE BUTTON	1	
3-7	7217-2601-01A	ZOOM BUTTON	1	
3-8	6107-0515-01A	ZOOM BUTTON SP	1	
3-9	7217-2599-01A	5WAY BUTTON	1	
3-10	6107-0512-01A	SB BUTTON SP	1	
3-11	7217-2642-01A	EP WINDOW	1	
3-12	7308-0136-01A	EP WINDOW RUBBER	1	
3-13	7217-2600-01A	TFT LCD WINDOW	1	
3-14	7308-0137-01A	JACK COVER RUBBER	1	
3-15	7411-0958-01A	CF COVER HINGE	1	
3-16	6107-0514-01A	CF COVER SP	1	
3-17	7409-1316-01A	CF COVER TAPE LABEL	1	

4. PACKING ITEM

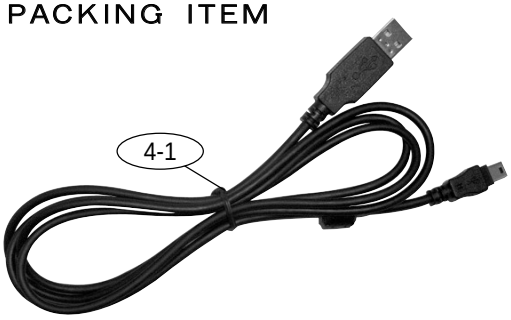

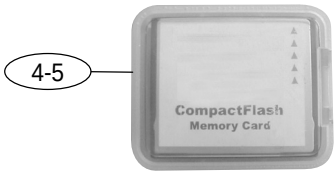

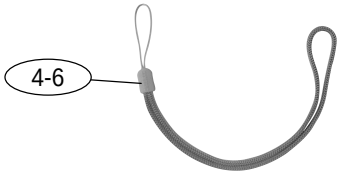

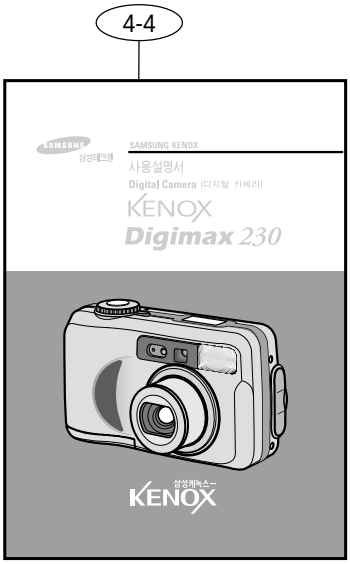

▶ PARTS LIST

Fig.No.	Parts No.	Parts Name	Q'ty	Remarks
4-1	3801-0014-01A	USB CABLE	1	
4-2	3801-0015-01A	VIDEO CABLE	1	
4-3	4609-0030-01A	DRIVER CD-ROM -EXP	1	
	4609-0031-01A	DRIVER CD-ROM -KOR	1	
4-4	6806-1246-01A	USER MANUAL(KOR)	1	
	6806-1247-01A	USER MANUALl (ENG)	1	
	6806-1248-01A	USER MANUAL(GER)	1	
	6806-1249-01A	USER MANUAL(FRA)	1	
	6806-1250-01A	USER MANUAL(SPA)	1	
	6806-1251-01A	USER MANUAL(ITA)	1	
	6806-1252-01A	USER MANUAL(CHI)	1	
	6806-1253-01A	USER MANUAL(DUT)	1	
	6806-1254-01A	USER MANUAL(POR)	1	
	6806-1255-01A	USER MANUAL(SWE)	1	
	6806-1256-01A	USER MANUAL(DEN)	1	
	6806-1257-01A	USER MANUAL(FIN)	1	
	6806-1258-01A	USER MANUAL(RUS)	1	
	6806-1348-01A	USER MANUAL(KOR-CYBERMAX 2000)	1	
4-5	1107-0015-01A	CF CARD 16MB	1	
	1107-0016-01A	CF CARD 32MB	1	
4-6	7409-1217-01A	STRAP	1	
4-7	6904-0225-01A	SKIN CASE	1	
	6904-0235-01A	SKIN CASE(CYBERMAX 2000)	1	
4-8	4301-0018-01A	BATTERY	4	

Ⅲ. ADJUSTMENT

1. Replacement Parts and Adjustment Items

Digimax 230 requires electrical adjustments when certain parts are replaced.

The table below indicates the adjustments required for the respective part replacements.

	AF Adjustment	AE Adjustment	AWB Adjustment	Flash Adjustment	Operation Inspection
Main board	③	①	②	④	●
Power board	X	X	X	X	●
Top board	X	X	X	X	●
CCD F PCB	③	①	②	④	●
Barrel ass'y	③	①	②	④	●
TFT LCD	X	X	X	X	●

※ When Main board is replaced, adjust certainly at the procedure as below.

AE Adjustment → AWB Adjustment → AF Adjustment → Flash Adjustment

2. Adjustment Tools

The following tools are required for electrical adjustment.

	AF Adjustment	AE Adjustment	AWB Adjustment	Flash Adjustment	Operation Inspection
Program	sktest09.bin	sktest03.bin	sktest05.bin	sktest06.bin	sktest16.bin
Equipment		Light source box (LV12,15)	AWB light box Daylight Fluorescen Tungsten		AC Adaptor
Chart	AF Charrt			Gray reflection chart(31%).	

▶ Program

Please contact to our website (www.ssa.net) and download the each programs.

▶ Equipment

- Light source box : Adjust AE at LV 12 and check at LV 15.
- AWB light box : Adjust AWB at Daylight/Fluorescen/Tungsten position.

▶ Chart

- AF chart : Please contact to our website (www.ssa.net) and print the AF Chart on the A3 size paper from the "AFCHART.pdf "
- Gray chart : Standard 31% Gray Chart.

3. Operation Inspection

a. Contact to our website www.ssa.net.

b. Connect the card reader to PC and format the CF card.(Please use the CF card unber the 16MB.)

c. Download the program[sktest03.bin] to CF card.

※ It will be changed the file name after downloading, please rename to the sktest03.bin.

d. Set the mode dial to PC mode.

e. Turn on the power of the camera after inserting the CF card.
It will be inspect every function of a camera as below sequence.

WIDE SHOT(FLASH OFF) → MACRO SHOT → NORMAL SHOT(FLASH OFF) → TELE SHOT(FLASH OFF) → WIDESHOT(FLASH ON) → SINGLE SHOT→ VOICE REC. → MOVE CLIP → SLIDE SHOW → DELET

4. Adjustment Items

1) AE adjustment.

a. Contact to our website www.ssa.net.

b. Connect the card reader to PC and format the CF card.

※ Please use the CF card unber the 16MB.

c. Download the program[sktest03.bin] to CF card.

※ It will be changed the file name after downloading, please rename to the sktest03.bin.

d. Set the camera as fig. no. 1.

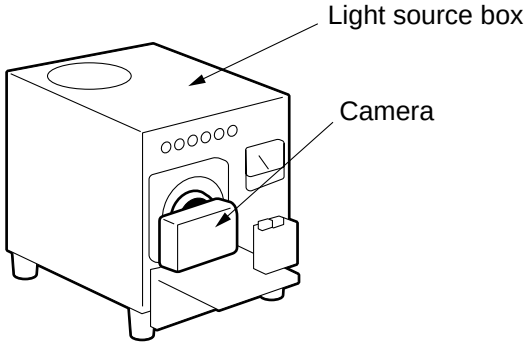

[Fig. No. 1]

e. Set the mode dial to PC mode.

f. Turn on the power of the camera after inserting the CF card.

g. Place the camera so that lens is set against the light source surface of the Light Source Box .

h. When the message on the right appears,
Set the Light Source Box to LV15. Press the "OK" button.

i. Set the Light Source Box to LV12. Press the "OK" button.

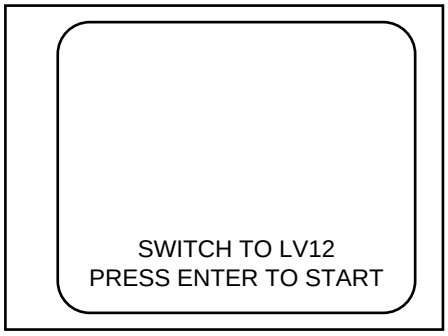

j. If displayed the "FINISH", please turn off the camera.

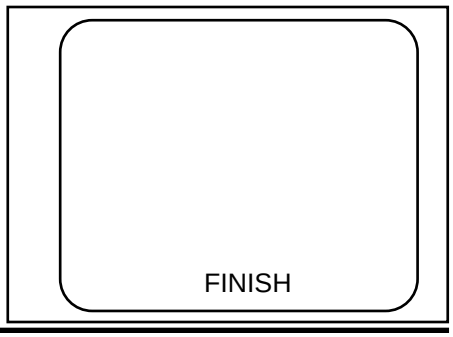

2) AWB adjustment.

a. Contact to our website www.ssa.net.

b. Connect the card reader to PC and format the CF card.

※ Please use the CF card unber the 16MB.

c. Download the program[sktest05.bin] to CF card.

※ It will be changed the file name after downloading, please rename to the sktest05.bin.

d. Set the camera as fig. no. 2.

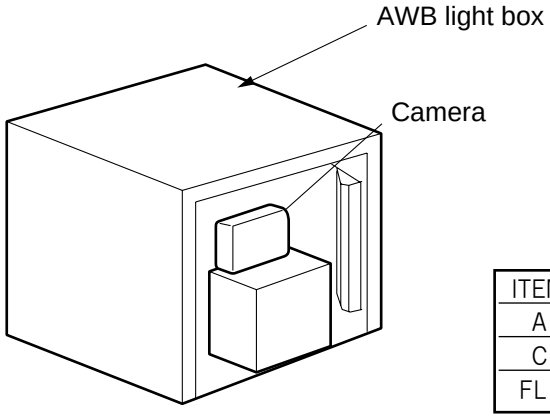

ITEM	COLOR
A	Tungsten(2856°K)
C	Daylight(6500°K)
FL1	Fluorescent/(4100°K)

[Fig. No. 2]

e. Set the mode dial to PC mode.

f. Turn on the power of the camera after inserting the CF card.

g. Place the camera in the AWB Light Box .
Make the room as dark as a darkroom.

h. When the message on the right appears,
Set the Light Source to A. Press the "OK" button.

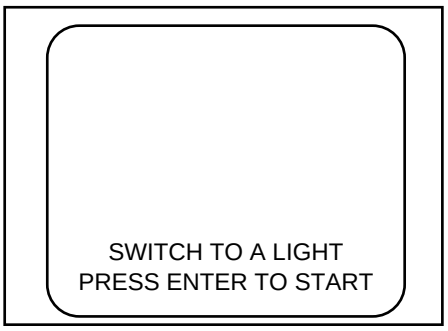

i. Set the Light Source to C. Press the "OK" button.

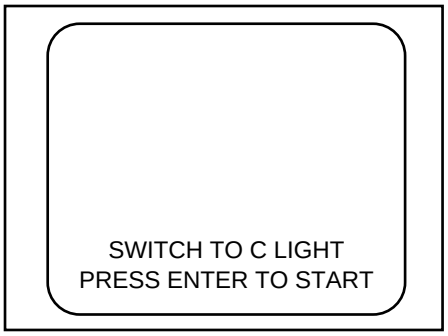

j. Set the Light Source to FL1. Press the "OK" button.
If displayed the "FINISH", please turn off the camera.

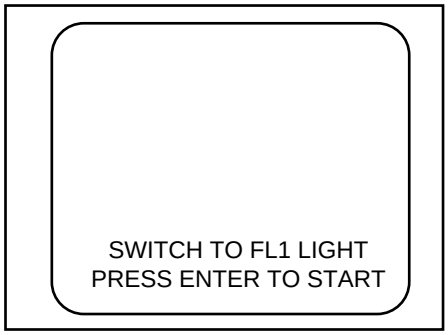

3) AF adjustment.

a. Contact to our website www.ssa.net.

b. Connect the card reader to PC and format the CF card.

※ Please use the CF card unber the 16MB.

c. Download the program[sktest09.bin] to CF card.

※ It will be changed the file name after downloading, please rename to the sktest09.bin.

d. Set the camera as fig. no. 3.

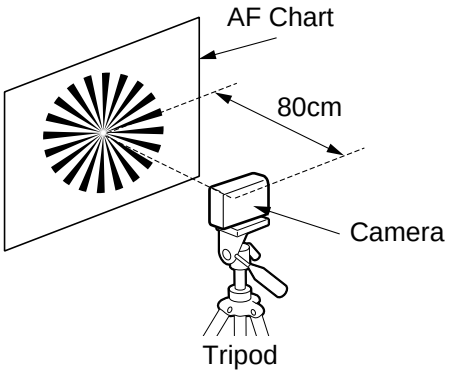

※ AF Chart : www.ssa.net
AFCHART.PDF

[Fig. No. 3]

e. Place the Auto Focus Chart 80cm away from the finder of camera front.

※ Adjust the light so that the brightness of the chart will be about EV8.5.

f. Fine-adjustment the position of the camera so that the center of the Auto Focus Chart is aligned with the center of the LCD.

g. When the message on the right appears, and it will be adjusted automatically.

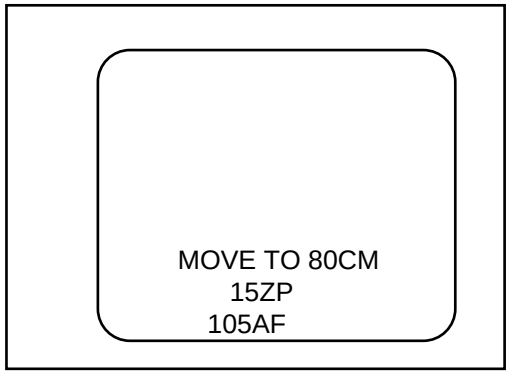

h. If displayed the "FINISH", please turn off the camera.

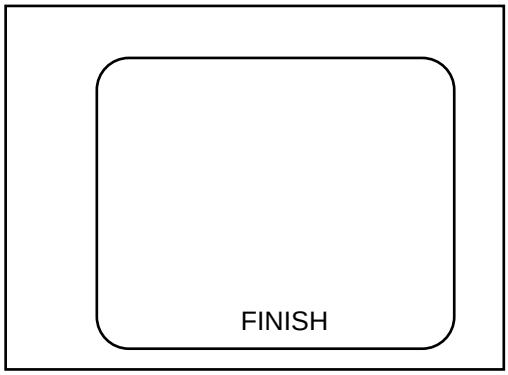

4) FLASH adjustment.

a. Contact to our website www.ssa.net.

b. Connect the card reader to PC and format the CF card.

※ Please use the CF card unber the 16MB.

c. Download the program[sktest06.bin] to CF card.

※ It will be changed the file name after downloading, please rename to the sktest06.bin.

d. Set the camera as fig. no. 2.

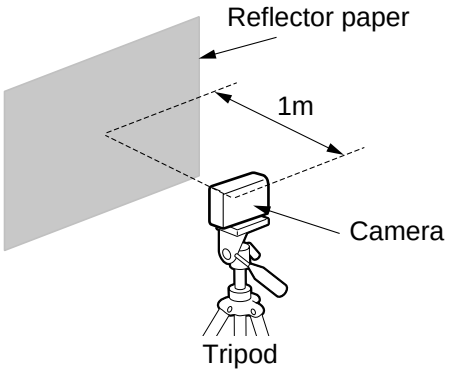

[Fig. No. 2]

e. Set the mode dial to PC mode.

f. Turn on the power of the camera after inserting the CF card[sktest06.bin].

g. Place the 31% Gray Chart 1m away from the finder of camera front.
Make the room as dark as a darkroom.

h. When the message on the right appears,
press the "OK" button.

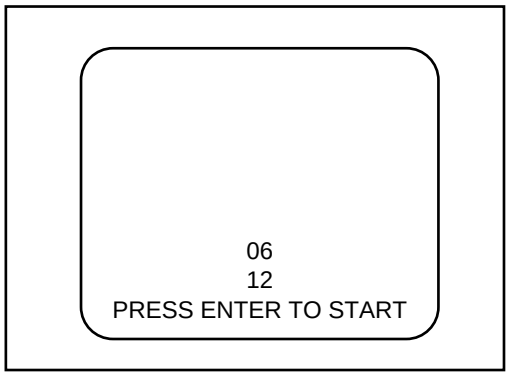

i. If displayed the "FINISH", please turn off the camera.

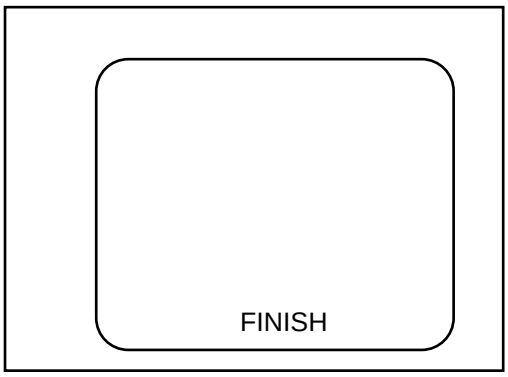

Ⅳ. PRODUCT CONSTRUCTION

1. INTERCONNECTION DIAGRAM

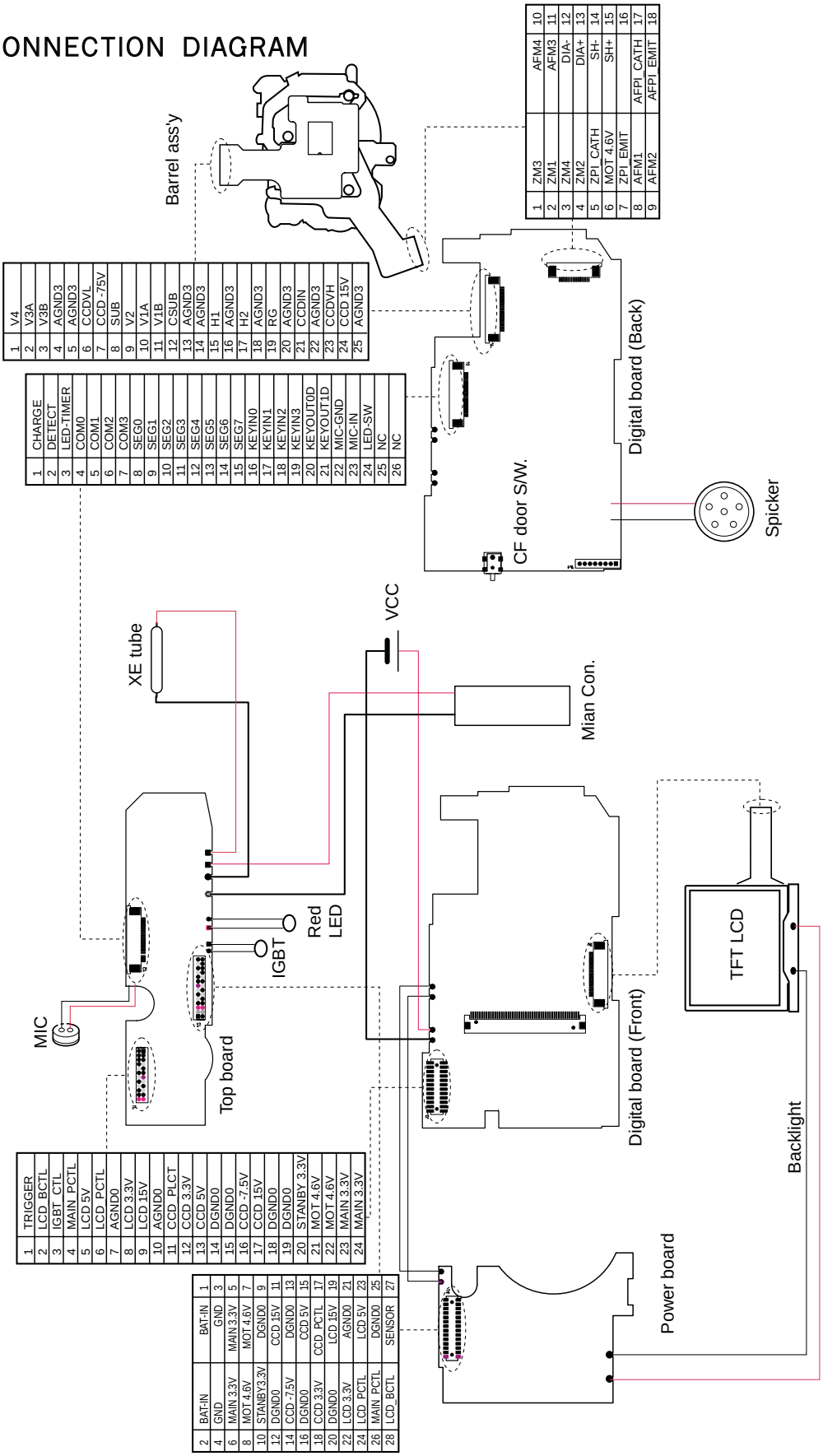

2. PARTS ARRANGEMENT FOR EACH PCB ASS'Y

1)MAIN PCB Assembly

a) Parts Arrangement

<TOP>

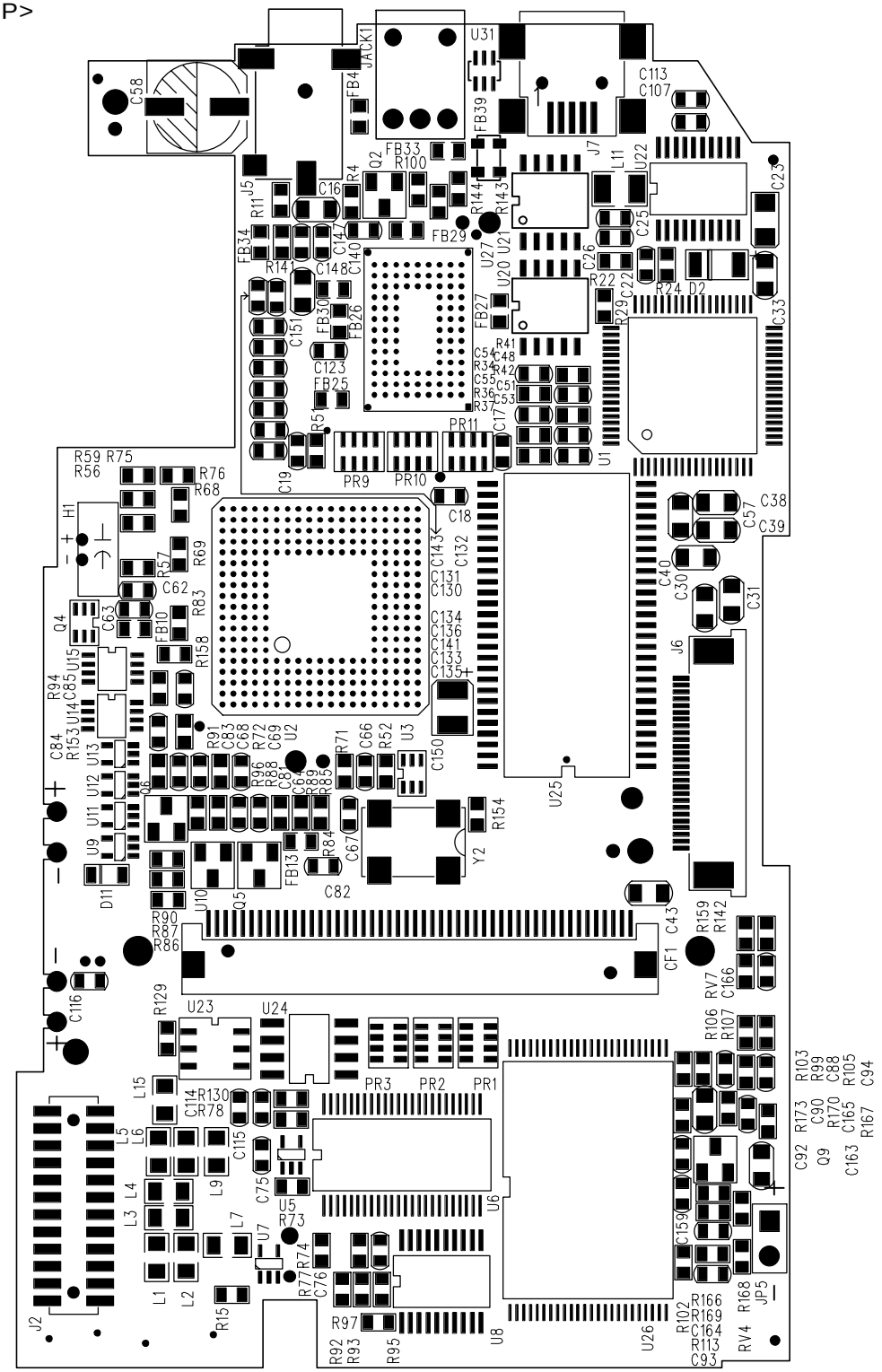

<BOTTOM>

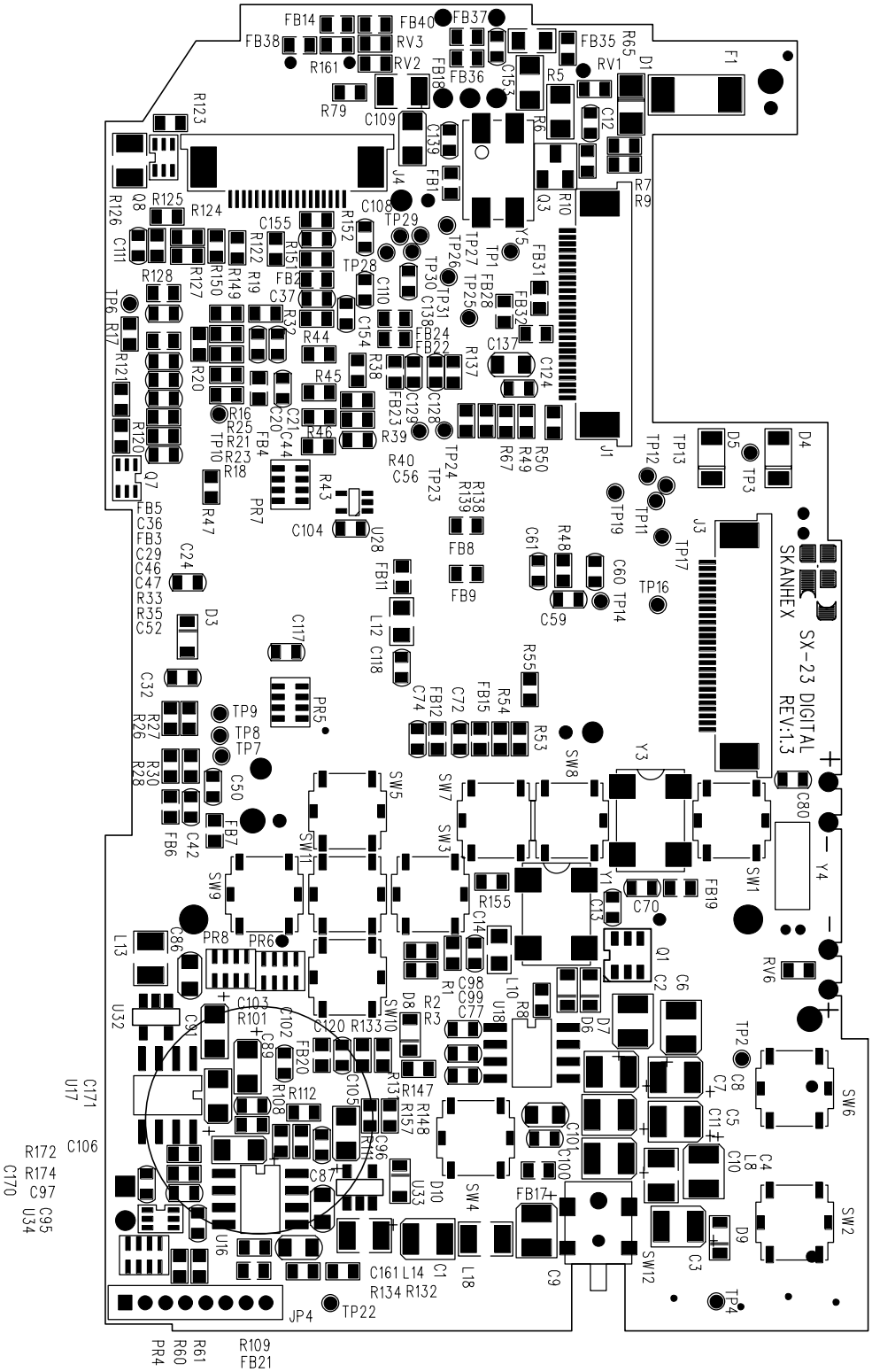

2) POWER PCB Assembly

a) Parts Arrangement

<TOP>

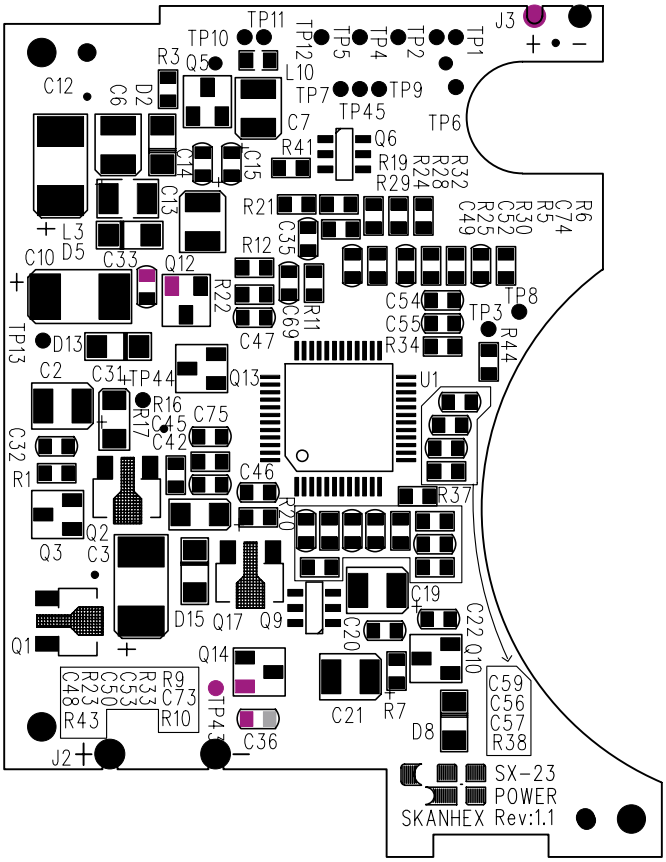

<BOTTOM>

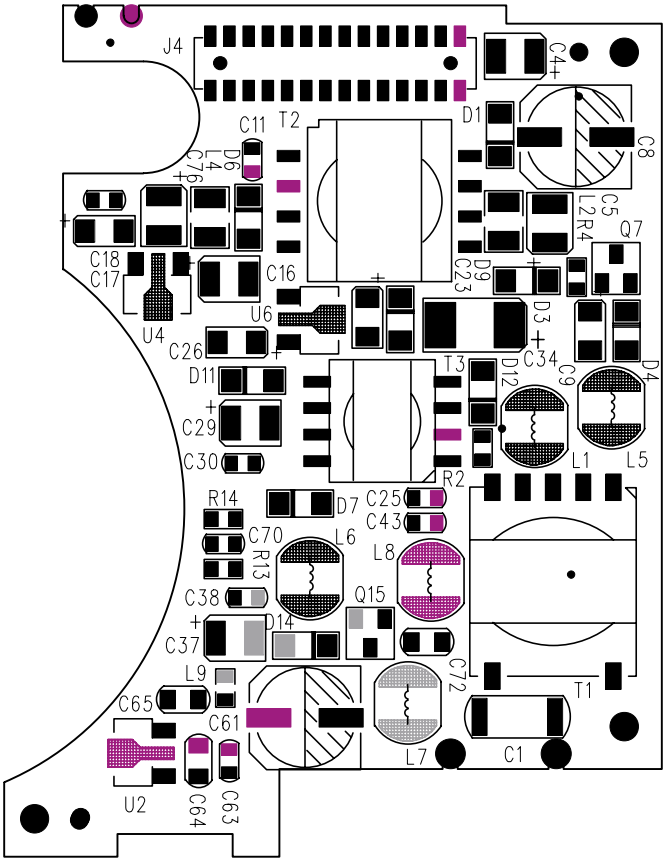
J4
C4
D1
C8
C11
T2
D6
L4
C76
C5
L2
R4
Q7
C18
C17
C16
D9
C23
U6
D3
U4
C26
C34
T3
D12
C9
D4
D11
C29
C30
L1
L5
R2
R14
D7
C25
C43
C70
L6
R13
L8
C38
Q15
D14
C37
C72
L9
T1
C65
C61
L7
C1
U2
C64
C63

3) TOP PCB Assembly

a) Parts Arrangement

<TOP>

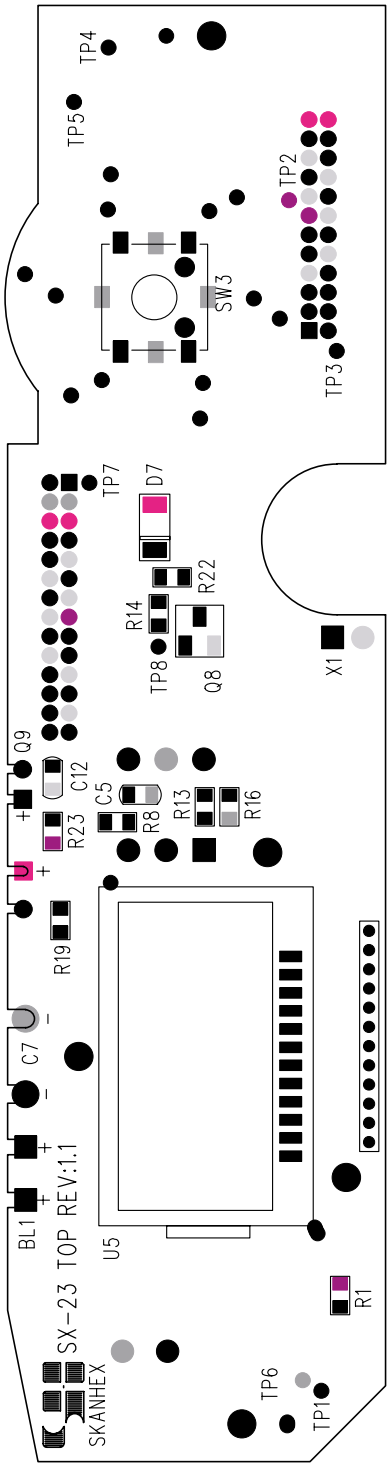

<BOTTOM>

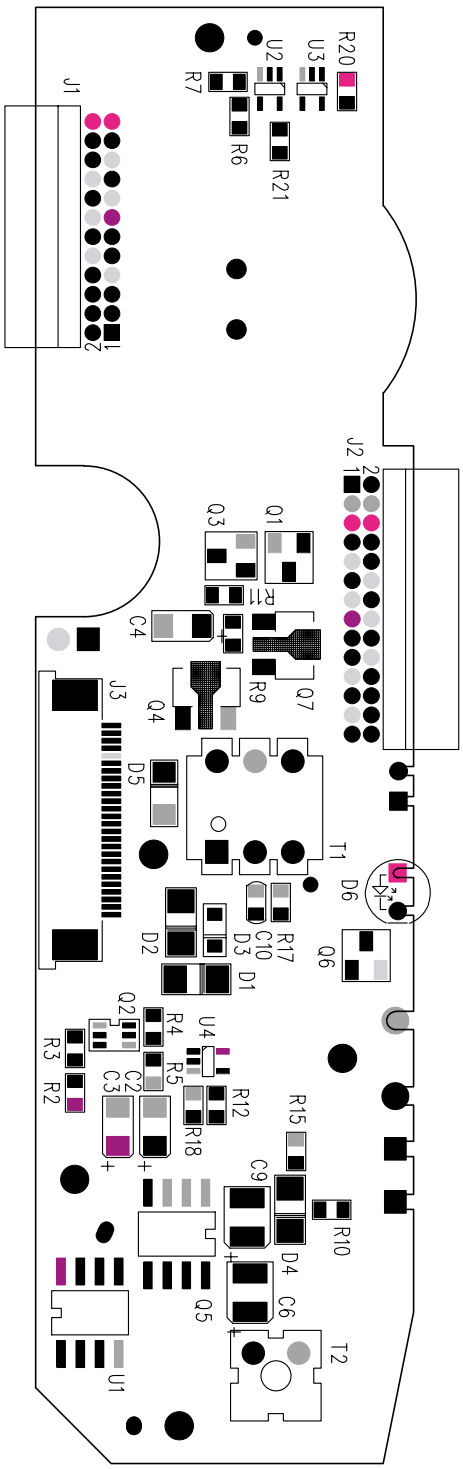

4) CCD F PCB Assembly

a) Parts Arrangement

<TOP>

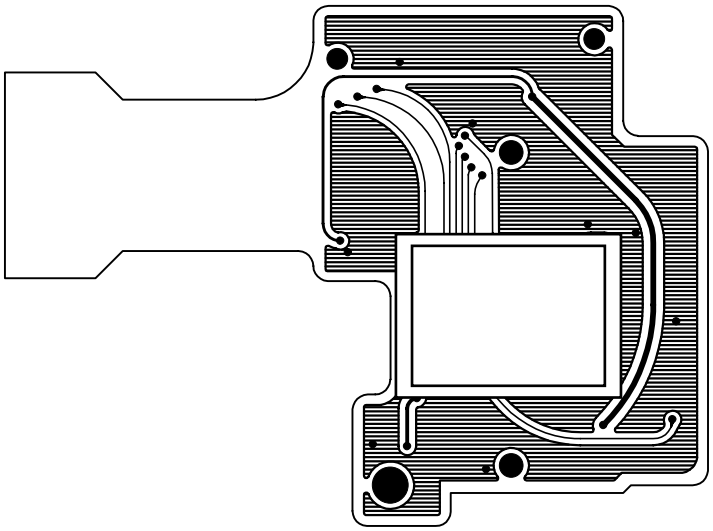

<BOTTOM>

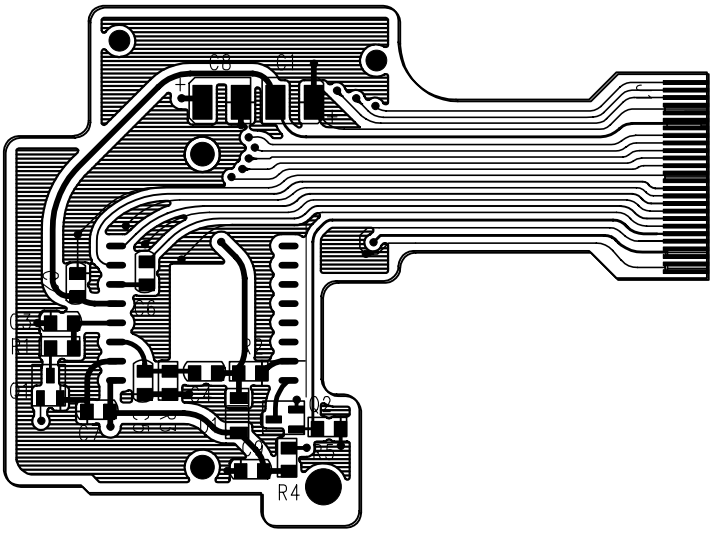

V. ADJUSTMENT TOOL

ADJUSTMENT TOOLS.

The following tools are required for electrical adjustment.

TOOL & JIG NAME	PLACE USED & PRICE	Remarks
AF Chart 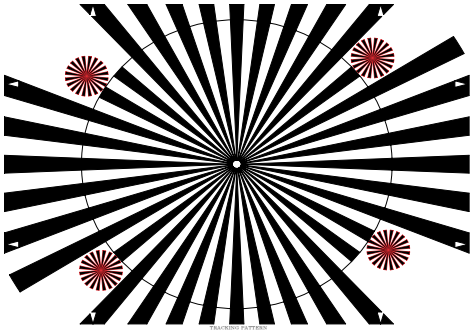	Please contact to www.ssa.net and print the AF Chart on the A3 size paper from the " AFCHART.pdf "	
AWB light source box	AWB adjustment and inspection. http://www.gretagmacbeth.com	
Brightness source box	AE adjustment LV 12, 15 : Digimax 230/340/410	
Adjustment programs (Contact to www.ssa.net and download)	Adjustment for Digimax 230/340/410 - AF : sktest09 - AE : sktest03 - AWB : sktest05 - FLASH : sktest06 - Operation inspection :sktest16	

TOOL & JIG NAME	PLACE USED & PRICE	Remarks
Color viewer(Light box) 	It is used to adjustment for Digimax 130. - EV and M-Shutter adjust - CCD defect pixel adjust. - LCD adjust Spec. : 5100°K:1550nt http://www.dnp.co.jp/semi/e/test/ standard.html	
Color Chart 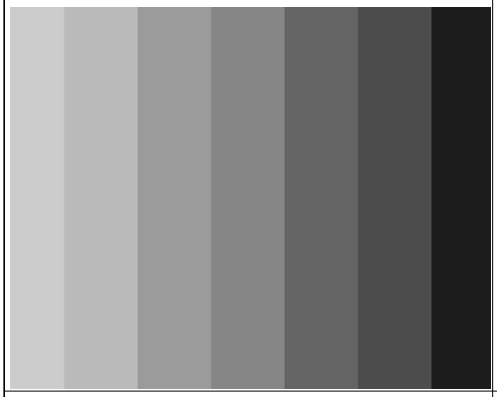	Color inspection chart	
Resoultion chart 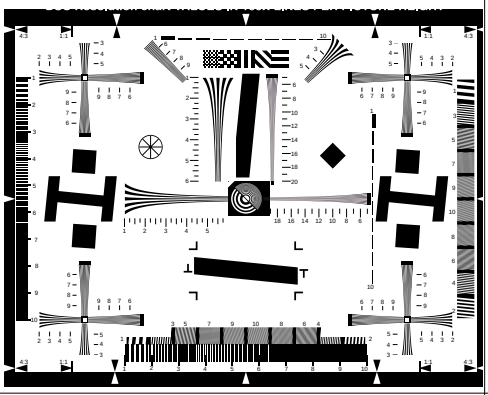	Resoultion inspection chart.	
Video collimator 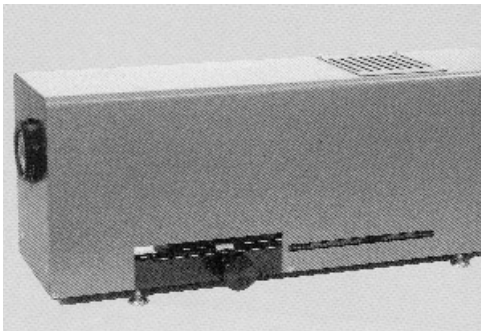	This Multi Video Collimator is used for detecting the focus plane in Digimax 210SE/220SE/350SE, inspection and adjustment	

Service Manual
SAMSUNG-photo smart 230

Menu

(A) Over View
A1-1 Camera Exterior
A1-2 Camera disassembly
(B) Exploded
(C) PCB
C1-1 circuit diagram
C1-2 Pcb diagram
(D) Parts list
D1-1 electron
D1-2 mechanism
(E) Repair
E.1: Tools.
E.2: PCB Disassembly
E2-1 Disassembly digital board
E2-2 Disassembly power board
E2-3 Disassembly TOP board
E.3.Trouble shooting
E.3.1 Power on digital camera
E.3-2 Power error
E3-2.1 Power does not turn on
E3-2.2 CCD power output error
E3-2.3 LCD power output error
E.3-3 Key in error
E.3-4 TFT-LCD error
E.3-5 Image error
E.3-6 Recording image error
E.3-7 Strobe error
E.3-8 LENS drive error
E.3-9 Audio play error
E.3-10 Audio record error
E.3-11 TV output error
E.3-12 USB error

A. OverView

A.1-1:Camera Exterior:

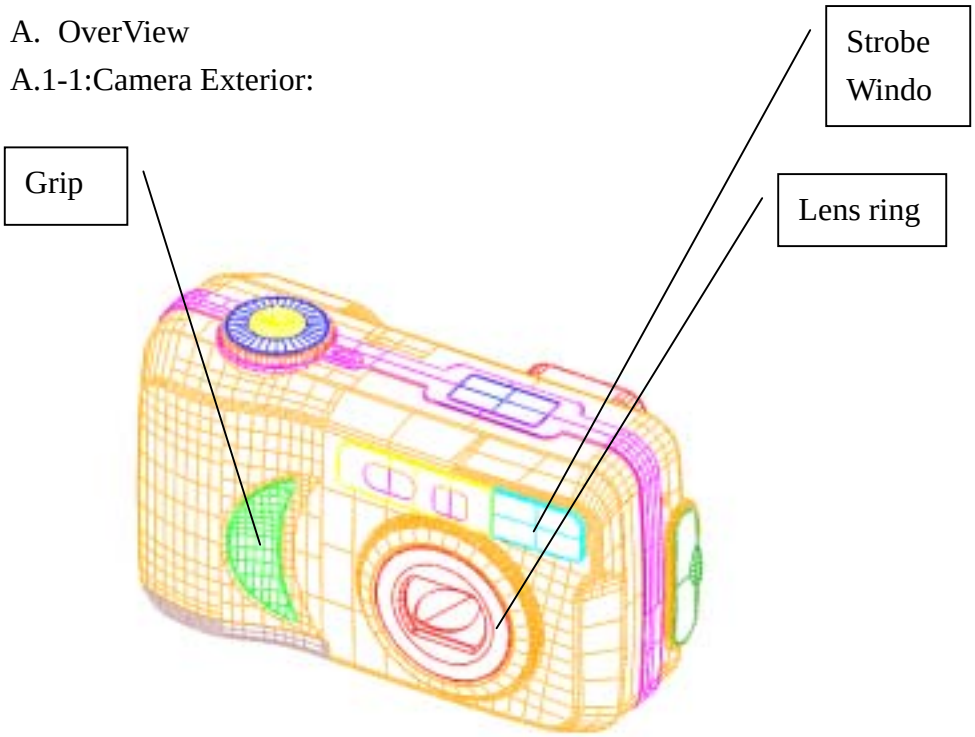

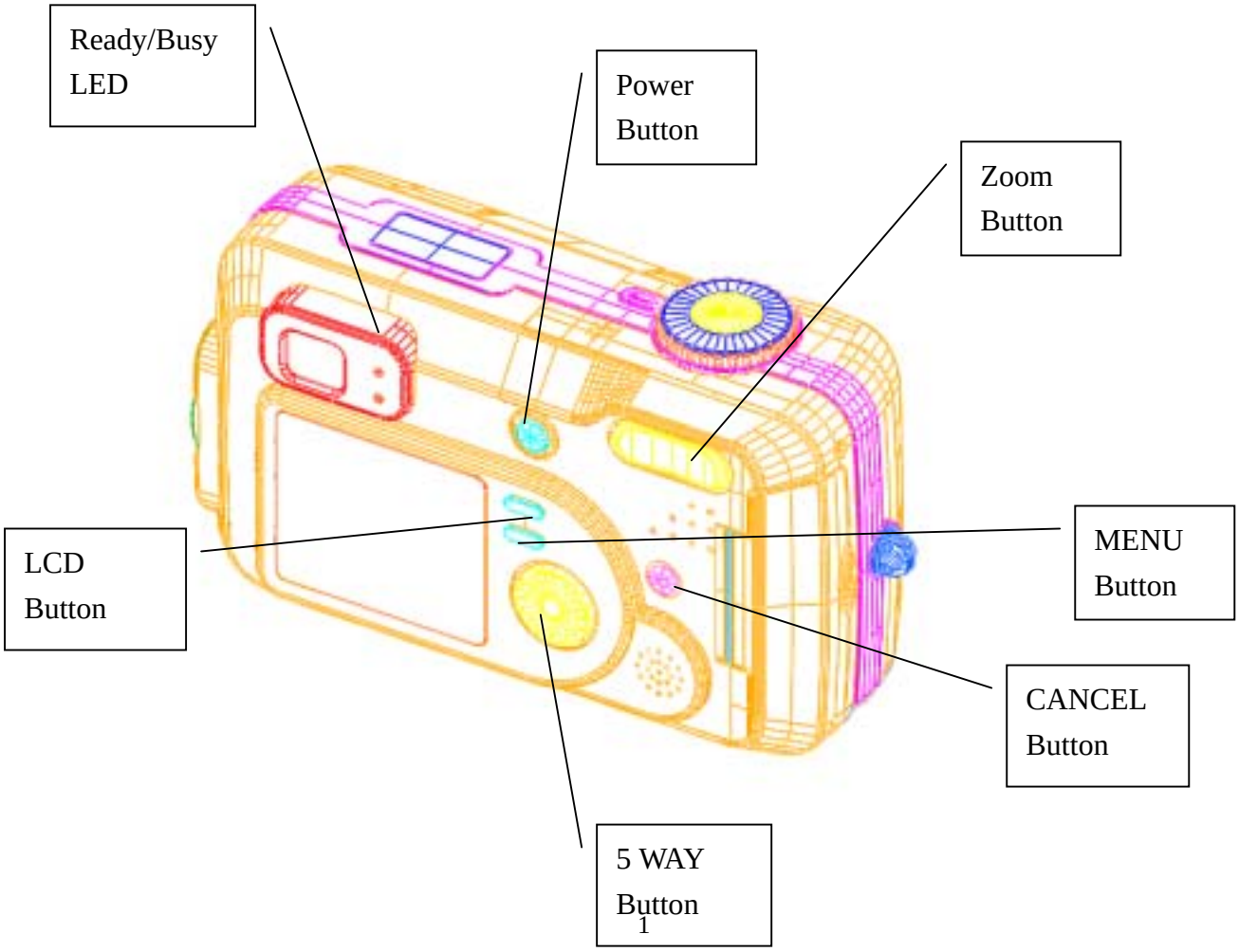

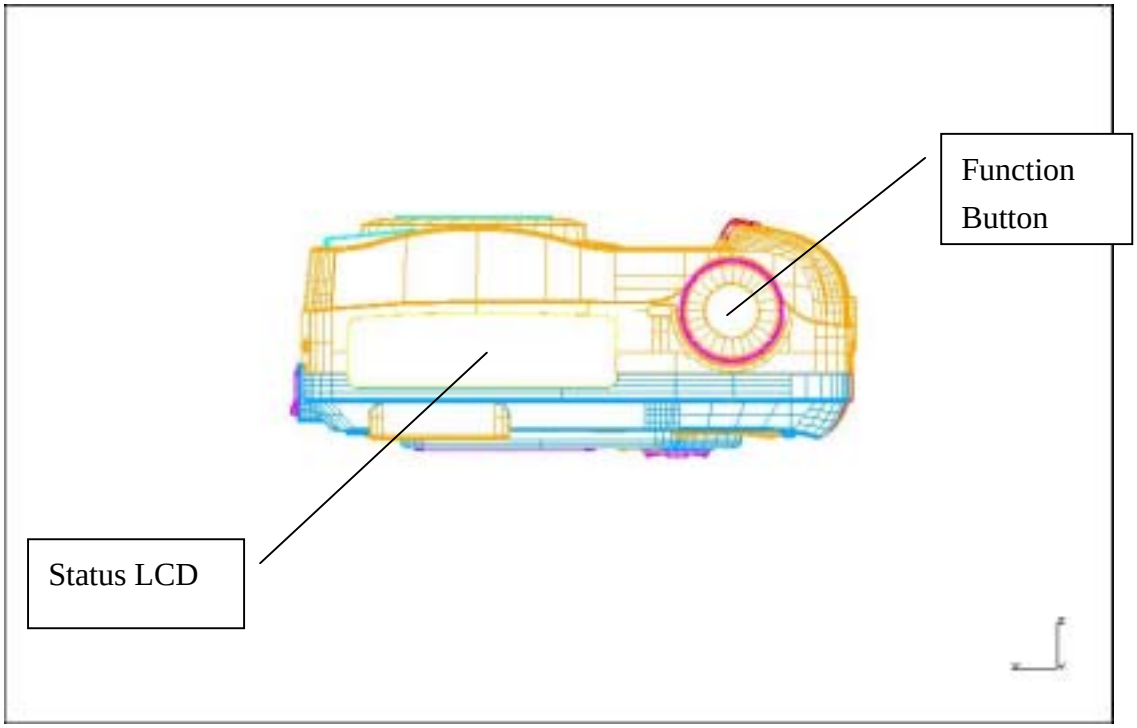
Function
Button
Status LCD

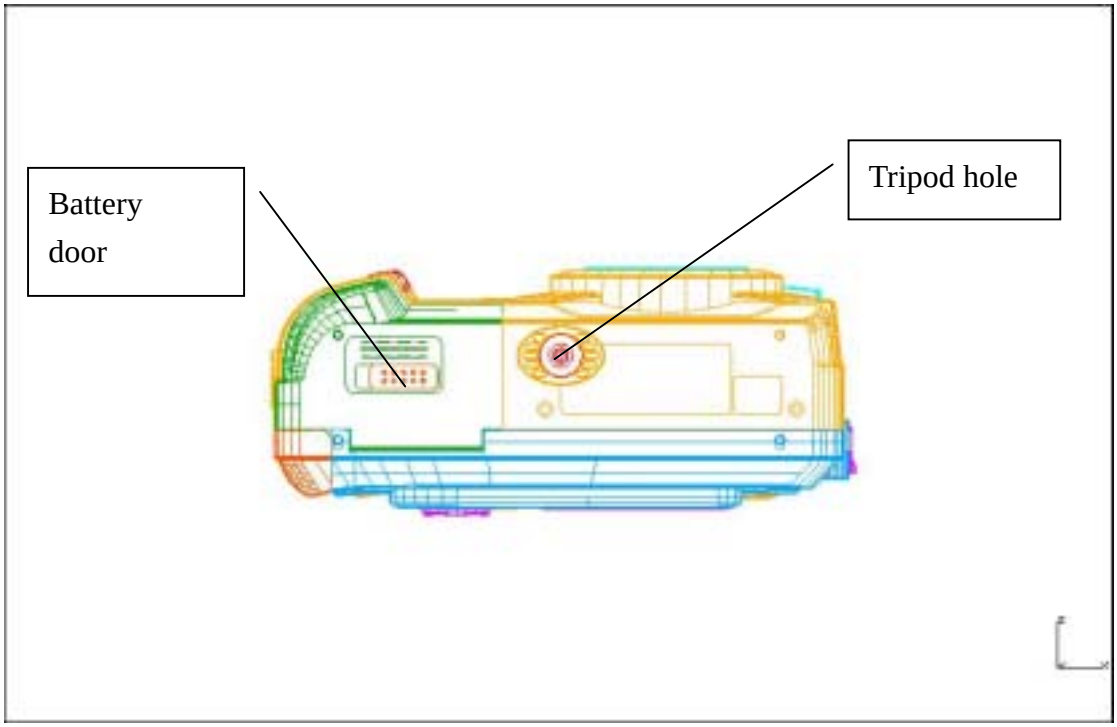
Battery
door
Tripod hole

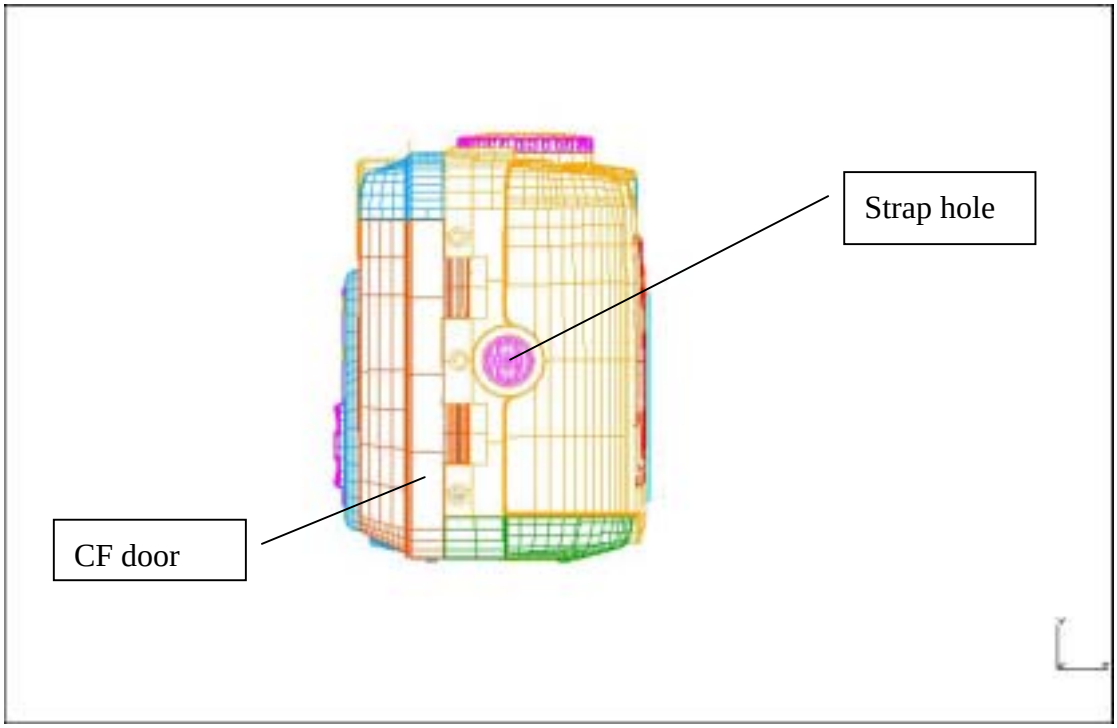

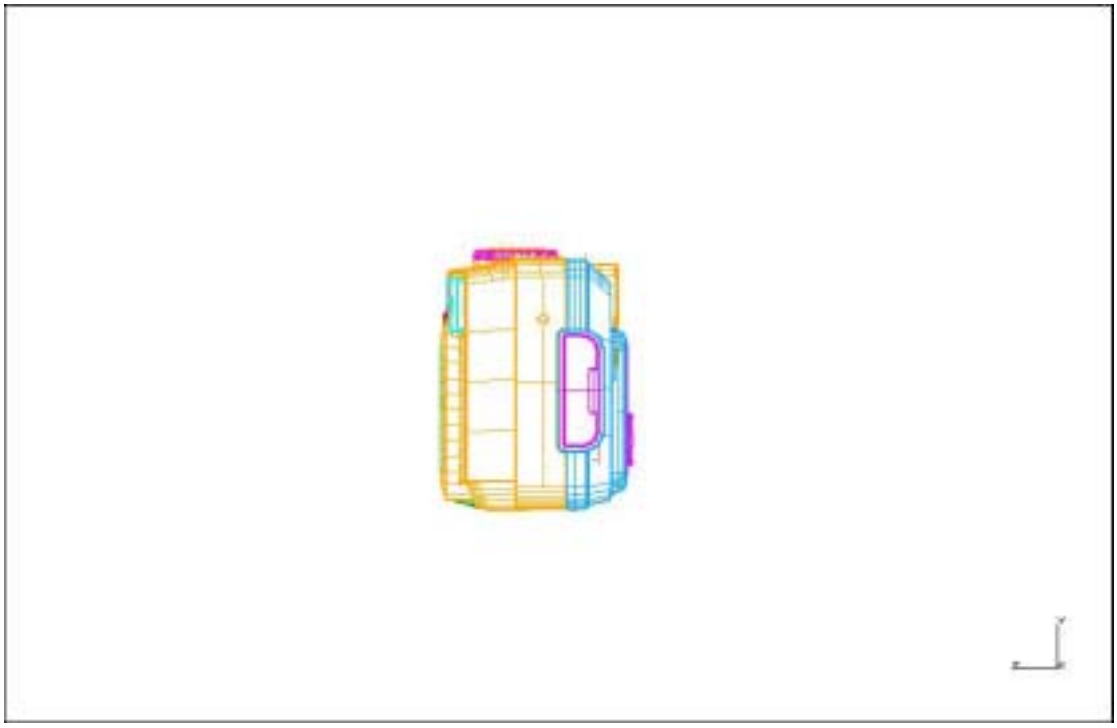

A1-2 Camera Disassembly

STEP 1.

Disassembly 7scerw

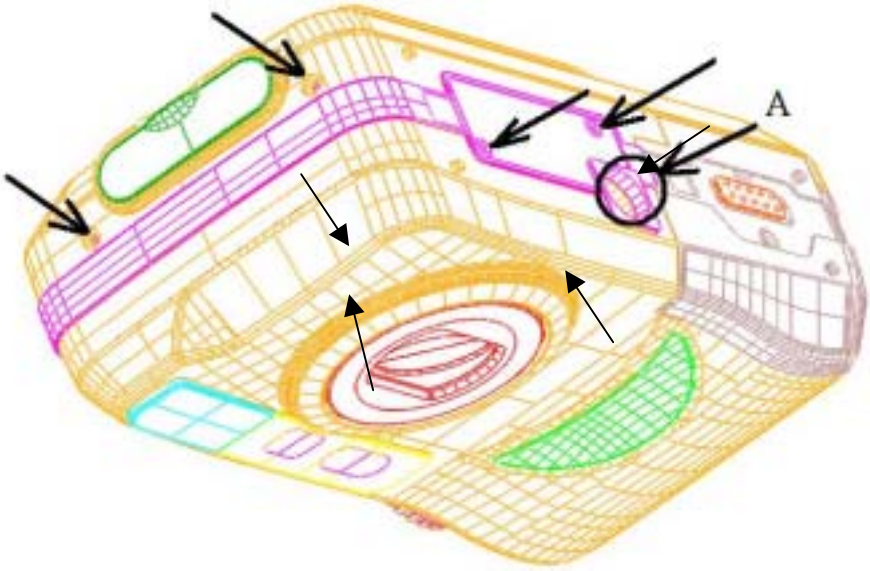

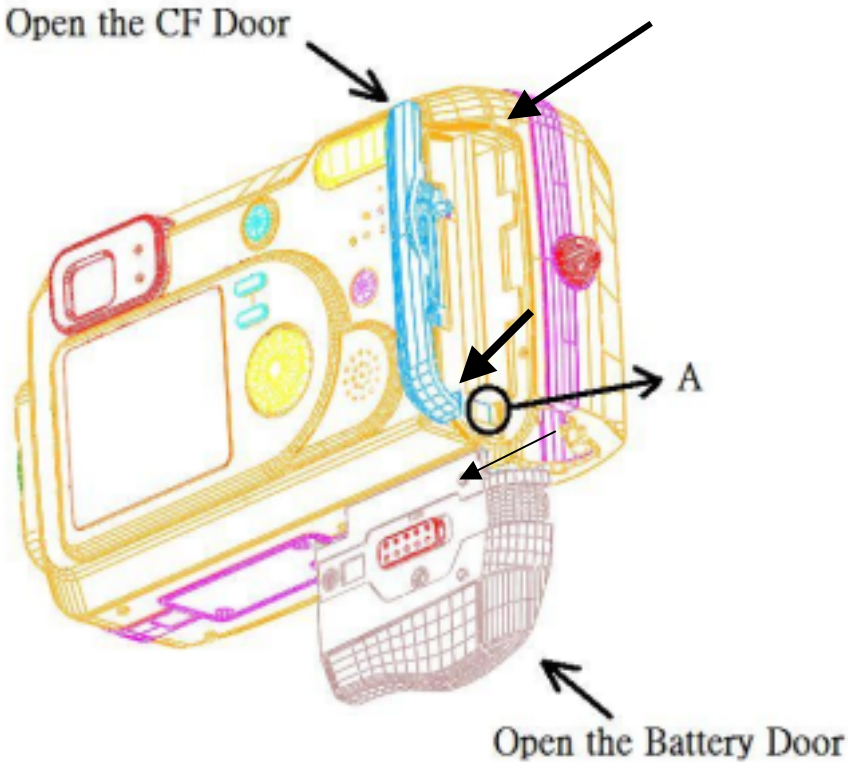

STEP 2

1、After disassembly screw then push off battery cover
2、Take the CF cover
3、Take the back cover

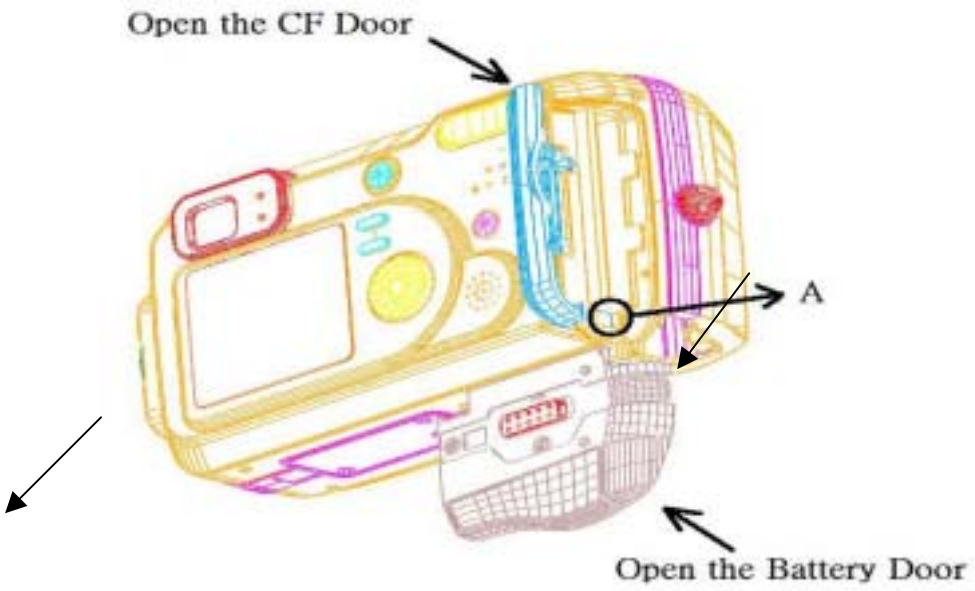

4、Please turn function-key to set mode, defense you break the function-key before disassemblying the front cover
5、Take the ahead cover

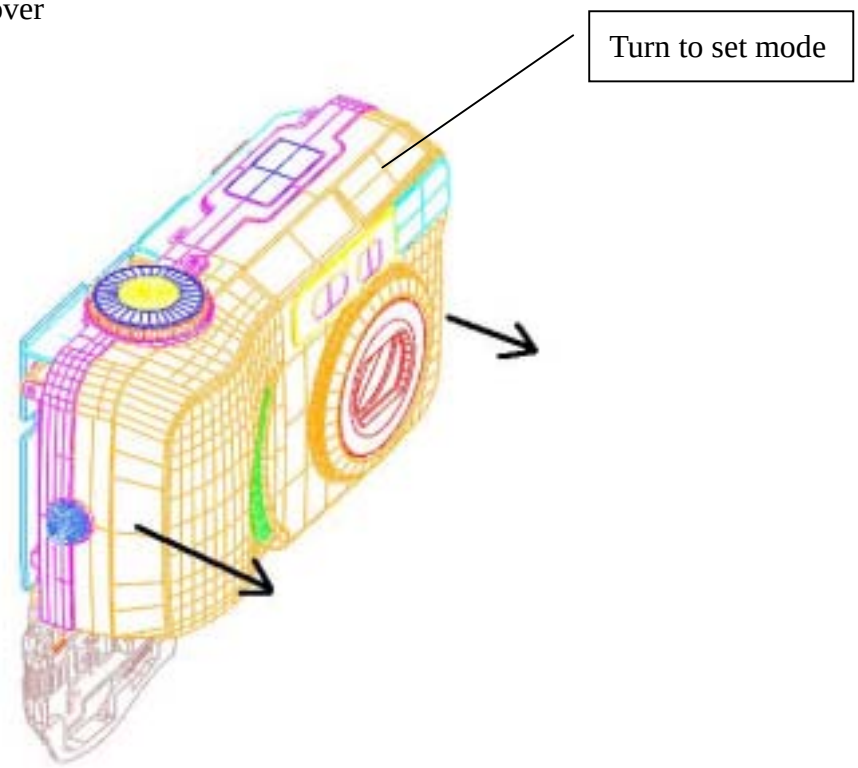

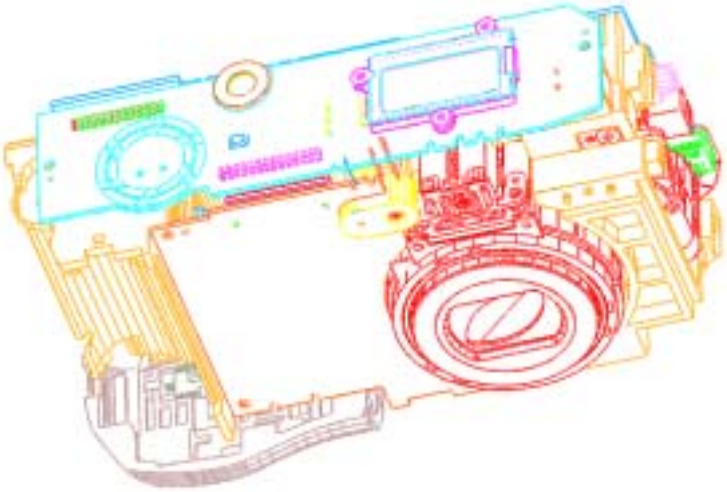

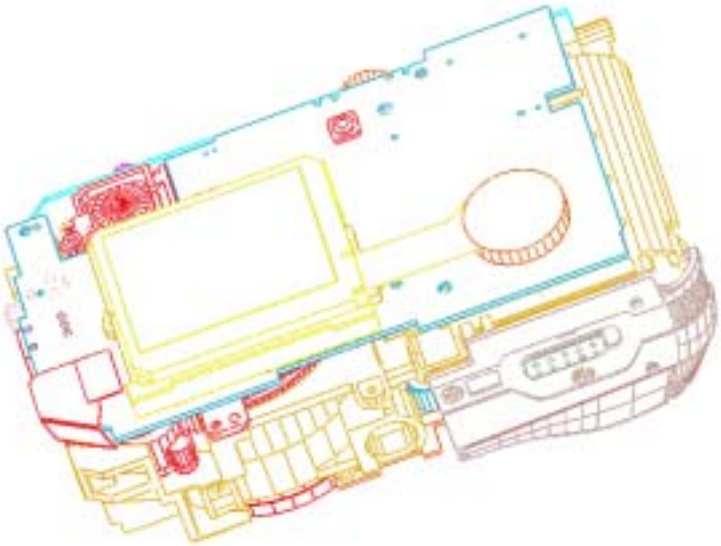

(B) EXPLODED

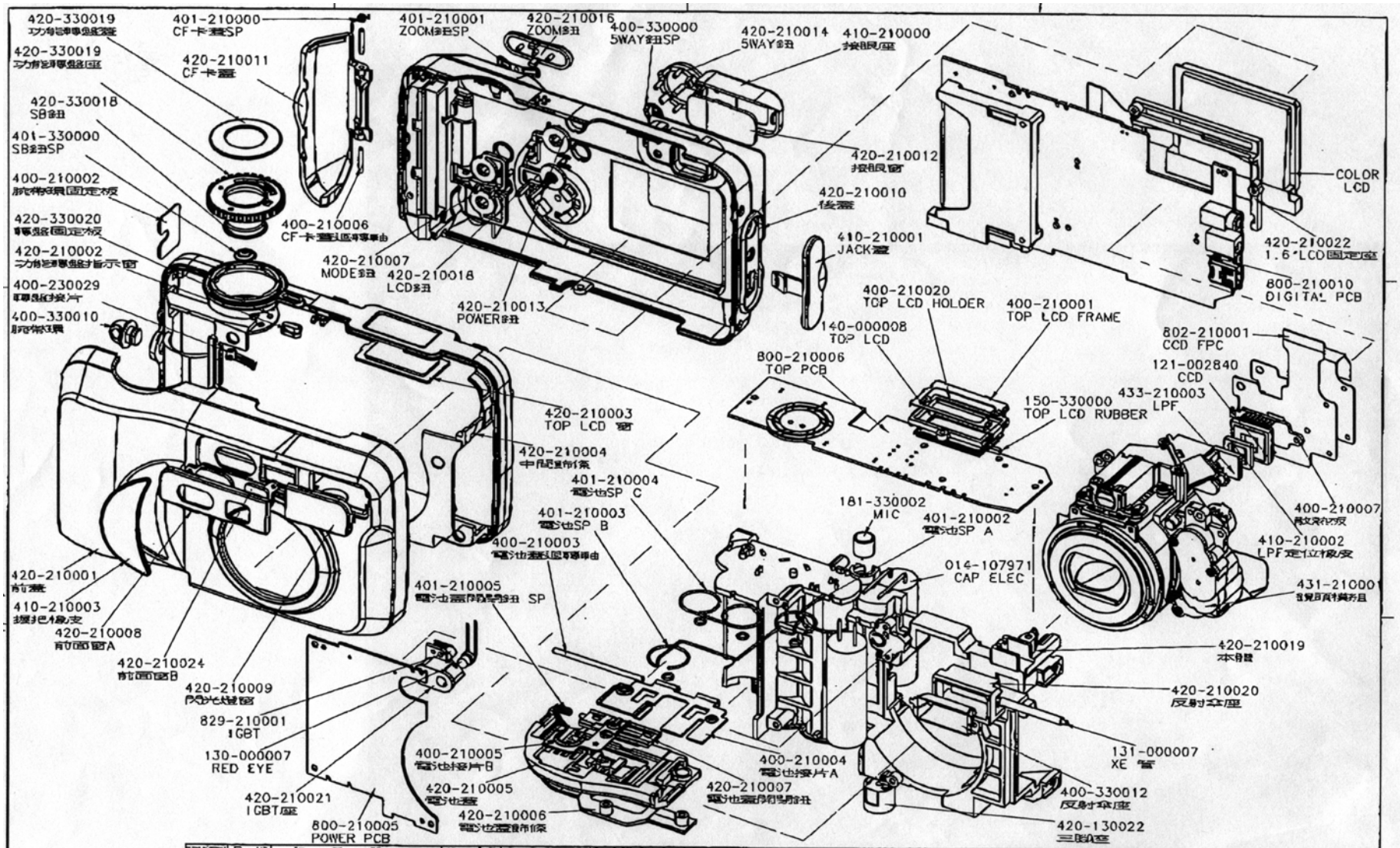

記號	日期	訂正記事	檢閱
00	900311	新規發行	陳益文

基準寸法容許差			
	6以上	0.08	◎
6以上	18以下	0.10	//
18以上	50以下	0.15	⊥
50以上	150以下	0.30	—
150以上	500以下	0.60	□
一般公差		0.10	◻

0.10

配佈單位	研發	工程	組立	採購	IQC	資料中心	大陸廠
	2	1	1	2	1	1	1

熱處理 | 加工記號 ▽▽(▽▽▽) | 材質 | 板厚t:

比例 1/1 | 表面處理

三角法 | 審核 吳振仲 | 設計 陳益文 | 承認 | 檢討 | 作成

新虹科技

部品名稱 SX-2J爆炸圖

部品番號 810-210200-00

(C) PCB

C.1-1 CIRCUIT DIAGRAM

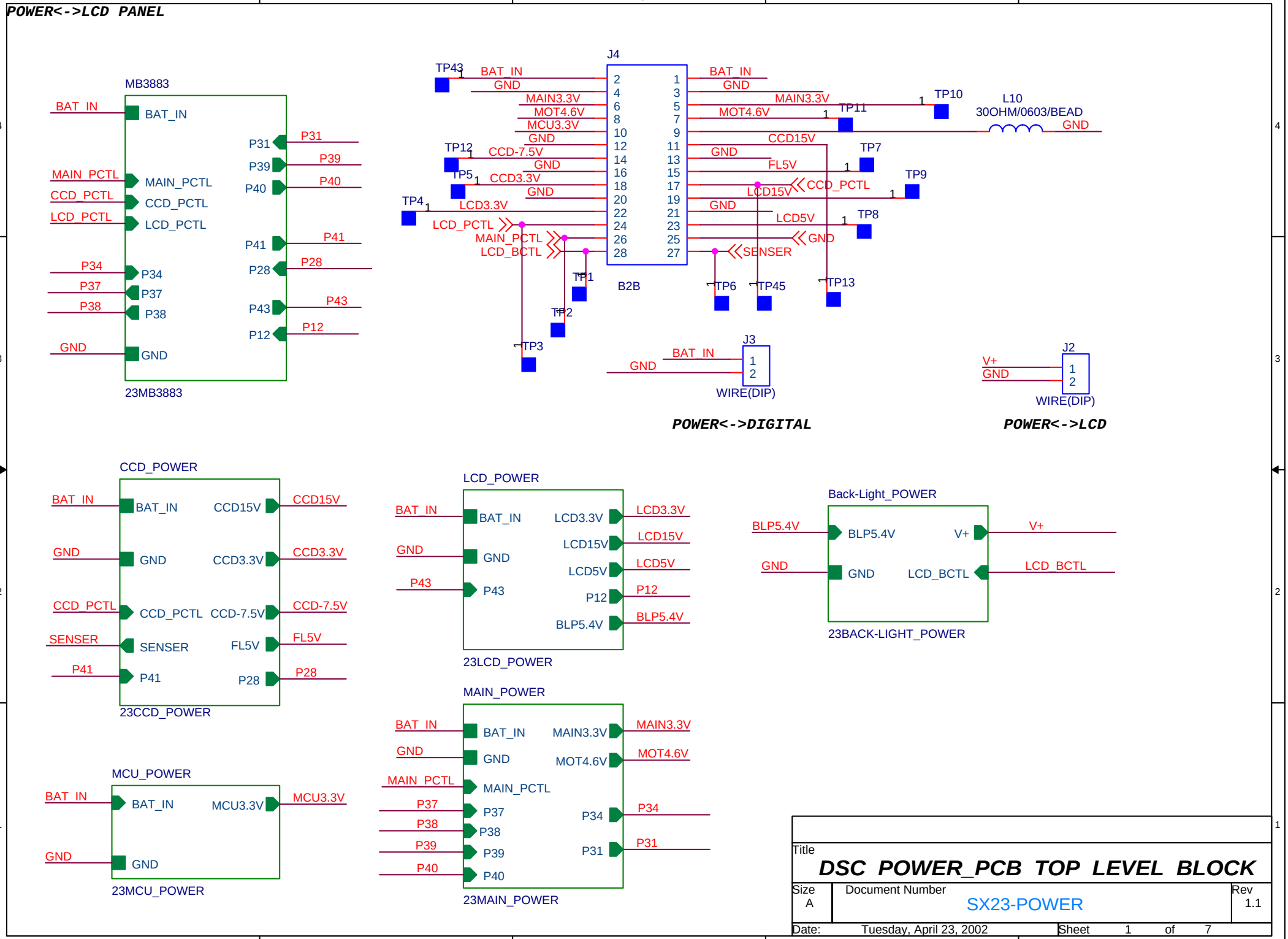
POWER<->LCD PANEL
MB3883
BAT_IN
MAIN_PCTL
CCD_PCTL
LCD_PCTL
P34
P37
P38
GND
P31
P39
P40
P41
P28
P43
P12
23MB3883
J4
B2B
TP43
TP12
TP5
TP4
TP1
TP2
TP3
TP6
TP45
TP13
TP10
TP11
TP7
TP9
TP8
L10
30OHM/0603/BEAD
MAIN3.3V
MOT4.6V
MCU3.3V
CCD-7.5V
CCD3.3V
LCD3.3V
LCD15V
LCD5V
FL5V
CCD15V
SENSER
LCD_BCTL
POWER<->DIGITAL
J3
WIRE(DIP)
J2
V+
POWER<->LCD
CCD_POWER
23CCD_POWER
LCD_POWER
23LCD_POWER
Back-Light_POWER
BLP5.4V
23BACK-LIGHT_POWER
MCU_POWER
23MCU_POWER
MAIN_POWER
23MAIN_POWER
Title
DSC POWER_PCB TOP LEVEL BLOCK
Size
A
Document Number
SX23-POWER
Rev
1.1
Date: Tuesday, April 23, 2002
Sheet 1 of 7

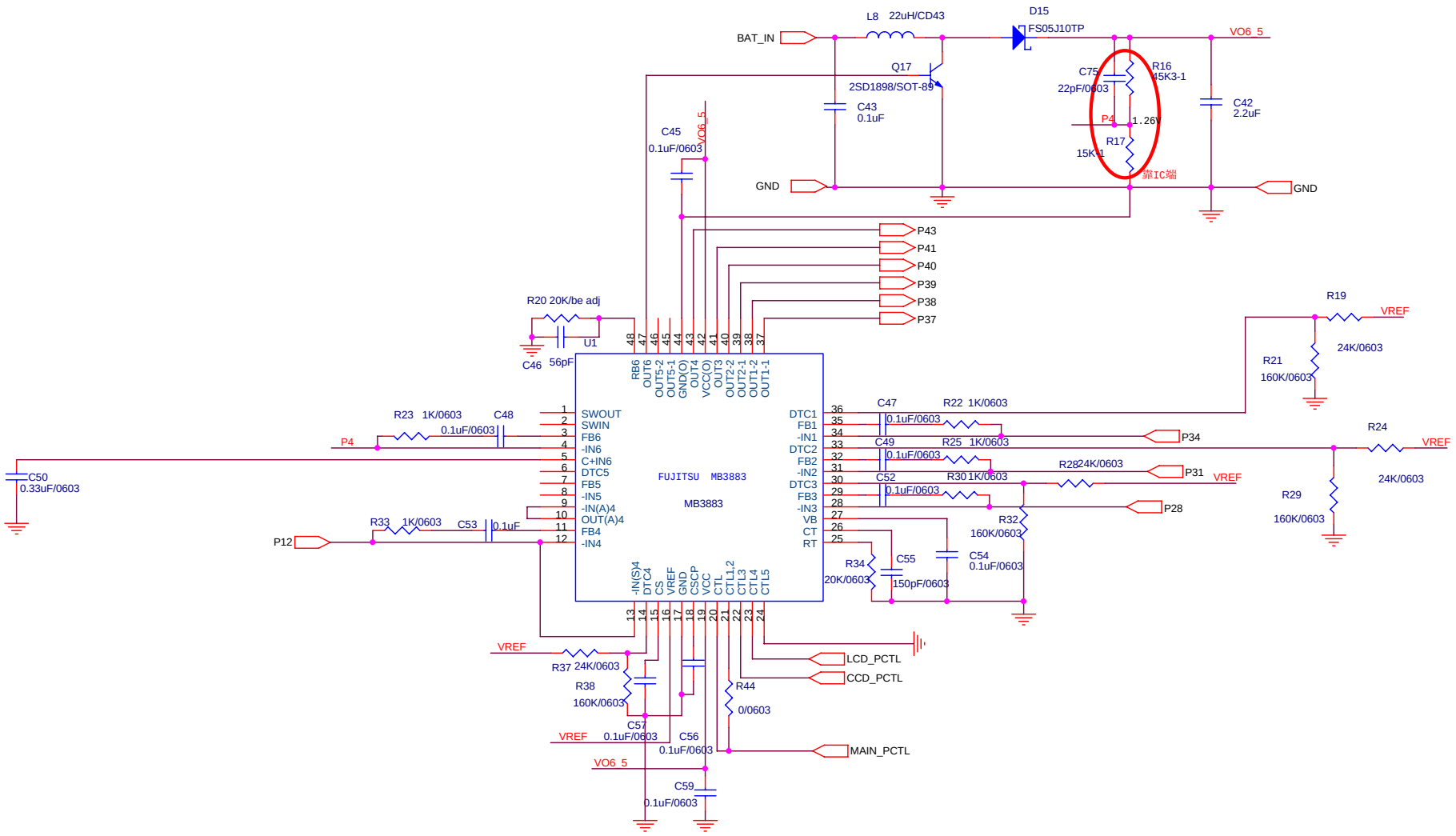

Title	<Title>	
Size B	Document Number SX23-POWER	Rev 1.1
Date: Tuesday, April 23, 2002	Sheet 6 of 7	

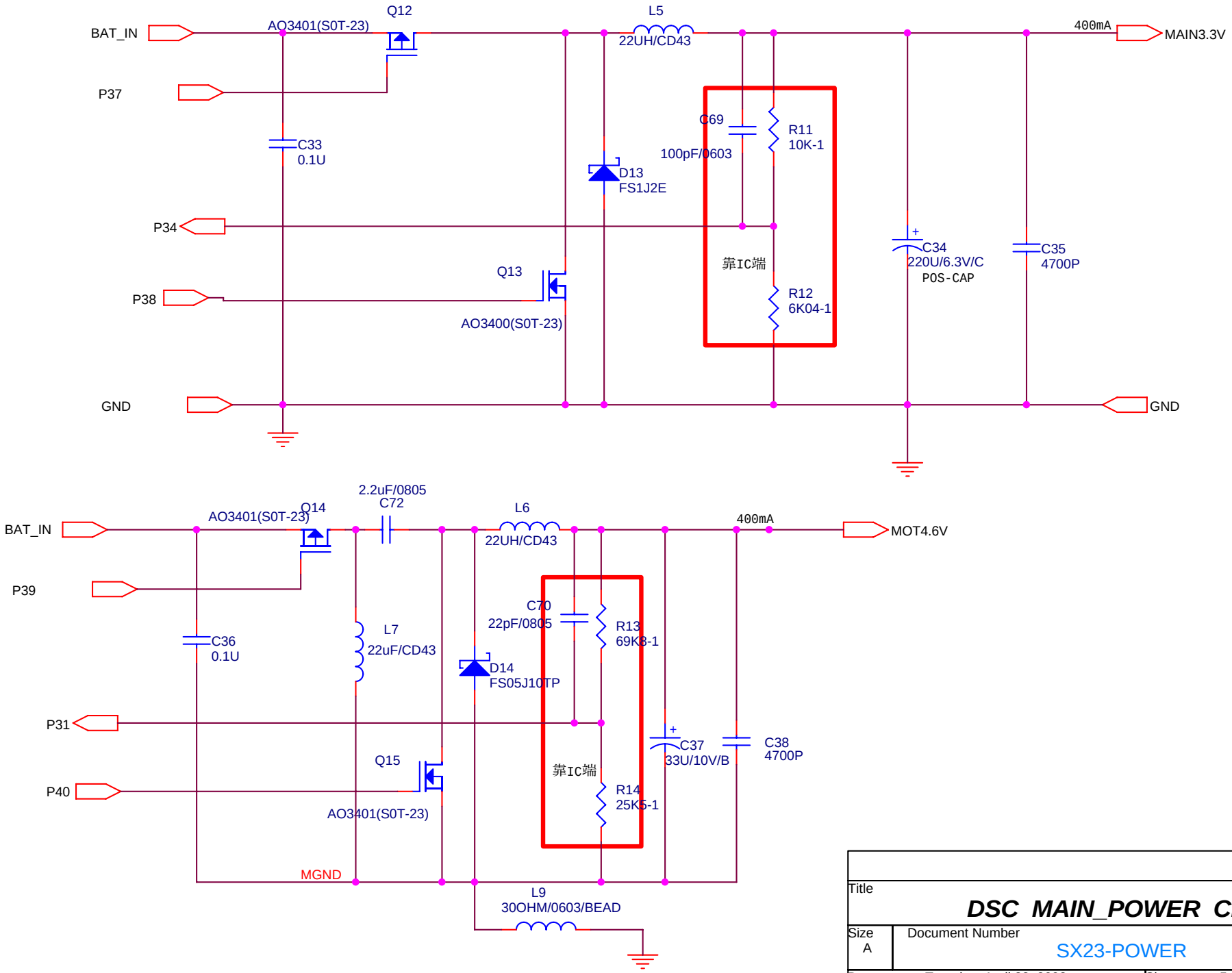

Title

DSC MAIN_POWER CIRCUIT

Size	Document Number	Rev
A	SX23-POWER	1.1

Date: Tuesday, April 23, 2002 Sheet 5 of 7

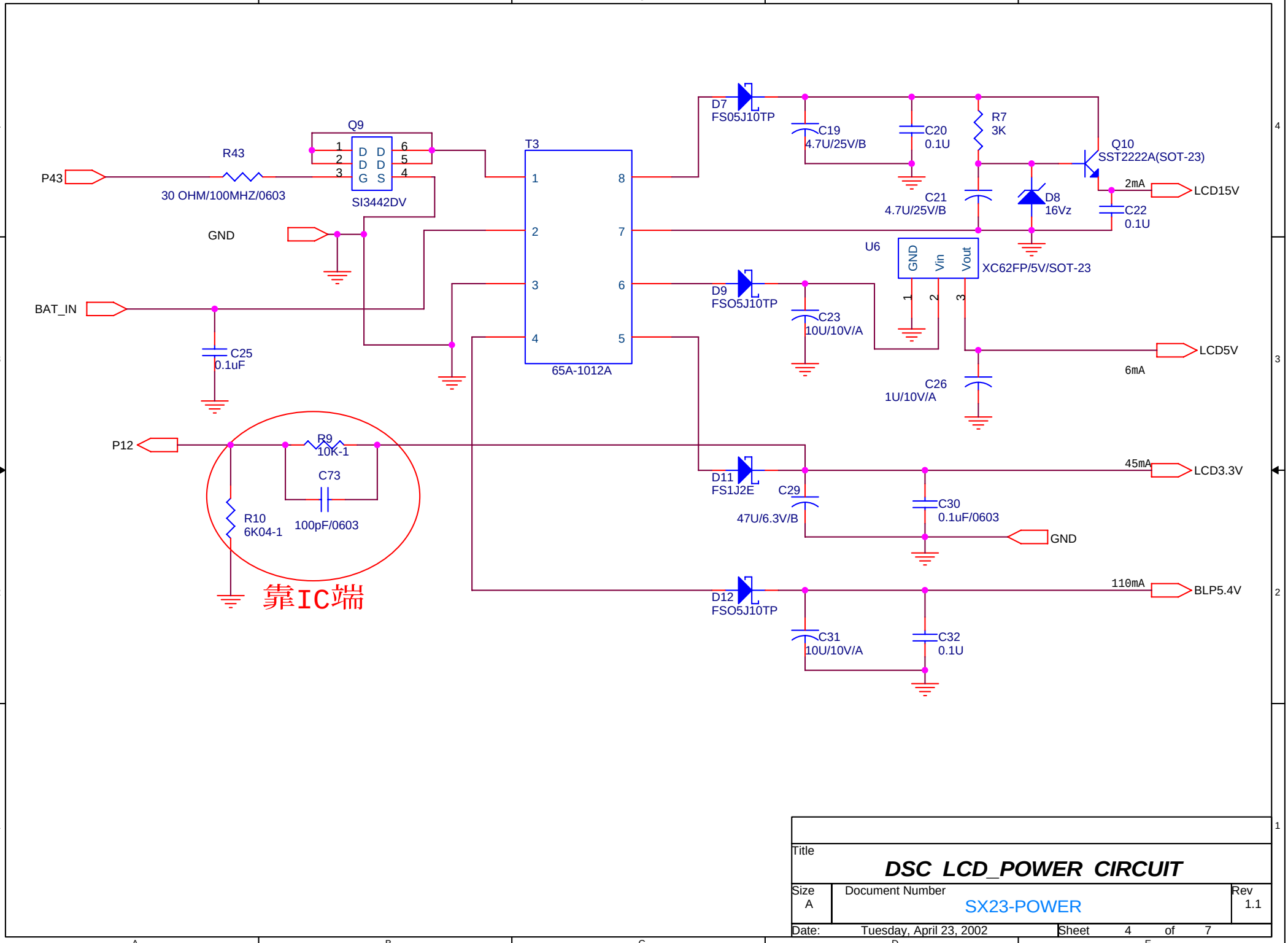

Title

DSC LCD_POWER CIRCUIT

Size	Document Number	Rev
A	SX23-POWER	1.1

Date: Tuesday, April 23, 2002 Sheet 4 of 7

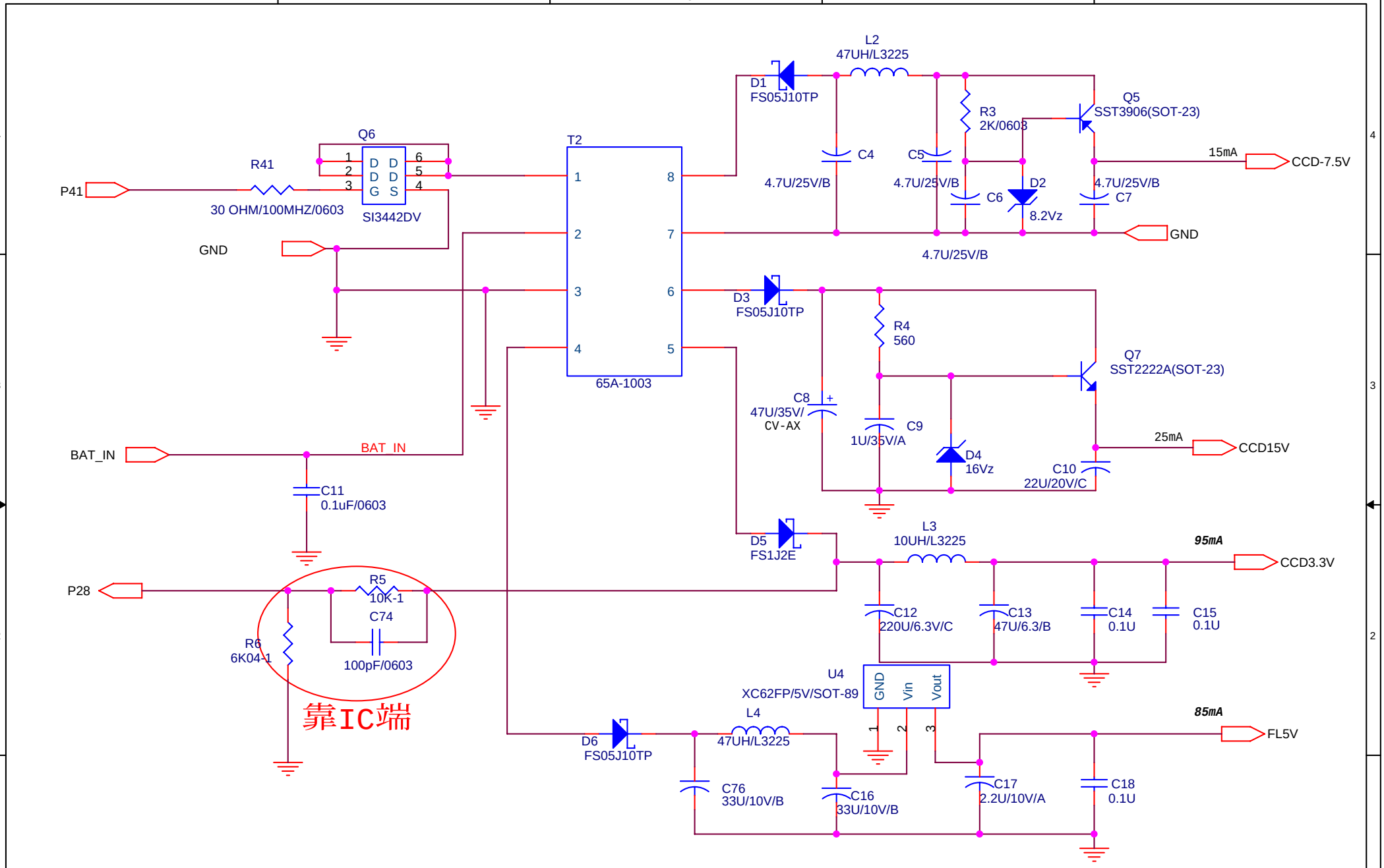

Title

DSC CCD_POWER CIRCUIT

Size	Document Number	Rev
A	SX23-POWER	1.1

Date: Tuesday, April 23, 2002 Sheet 3 of 7

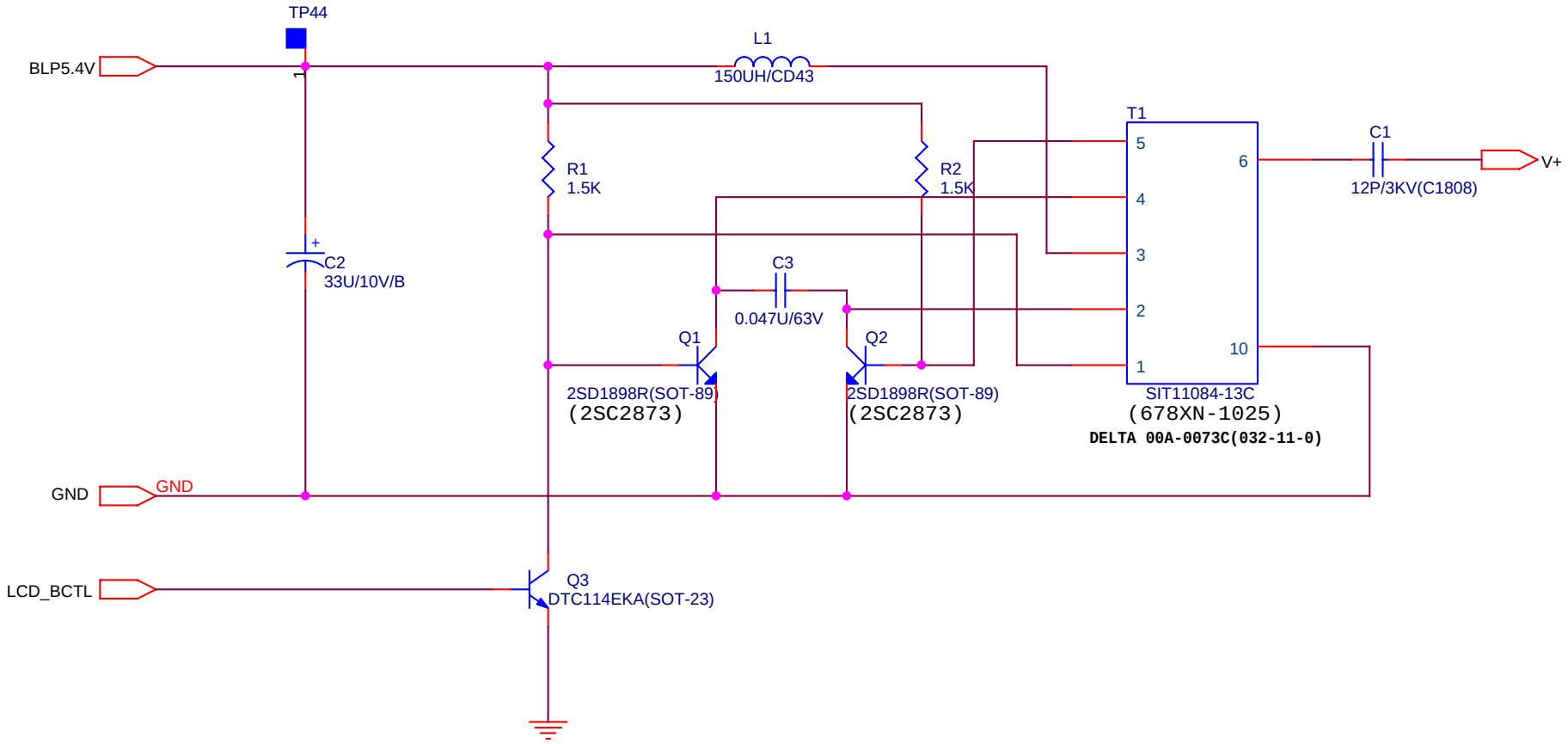

Title	DSC BACK-LIGHT & POWER CIRCUIT	
Size A	Document Number SX23-POWER	Rev 1.1
Date: Tuesday, April 23, 2002	Sheet 2 of 7	

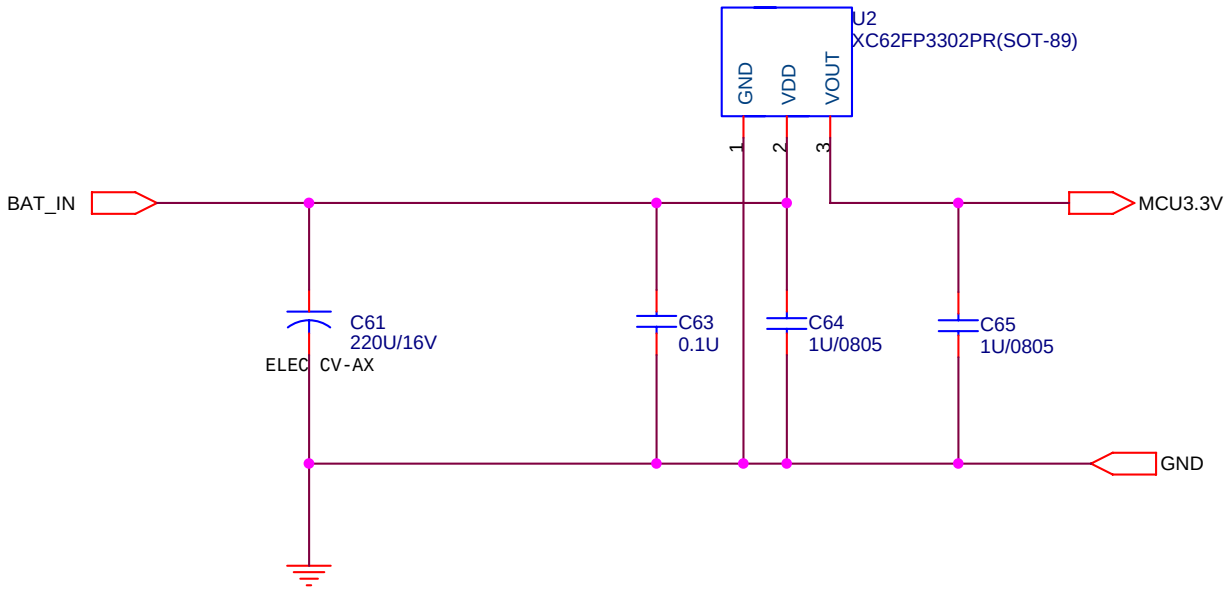

Title	**DSC MCU_POWER CIRCUIT**	
Size A	Document Number SX23-POWER	Rev 1.1
Date: Tuesday, April 23, 2002	Sheet 7 of 7	

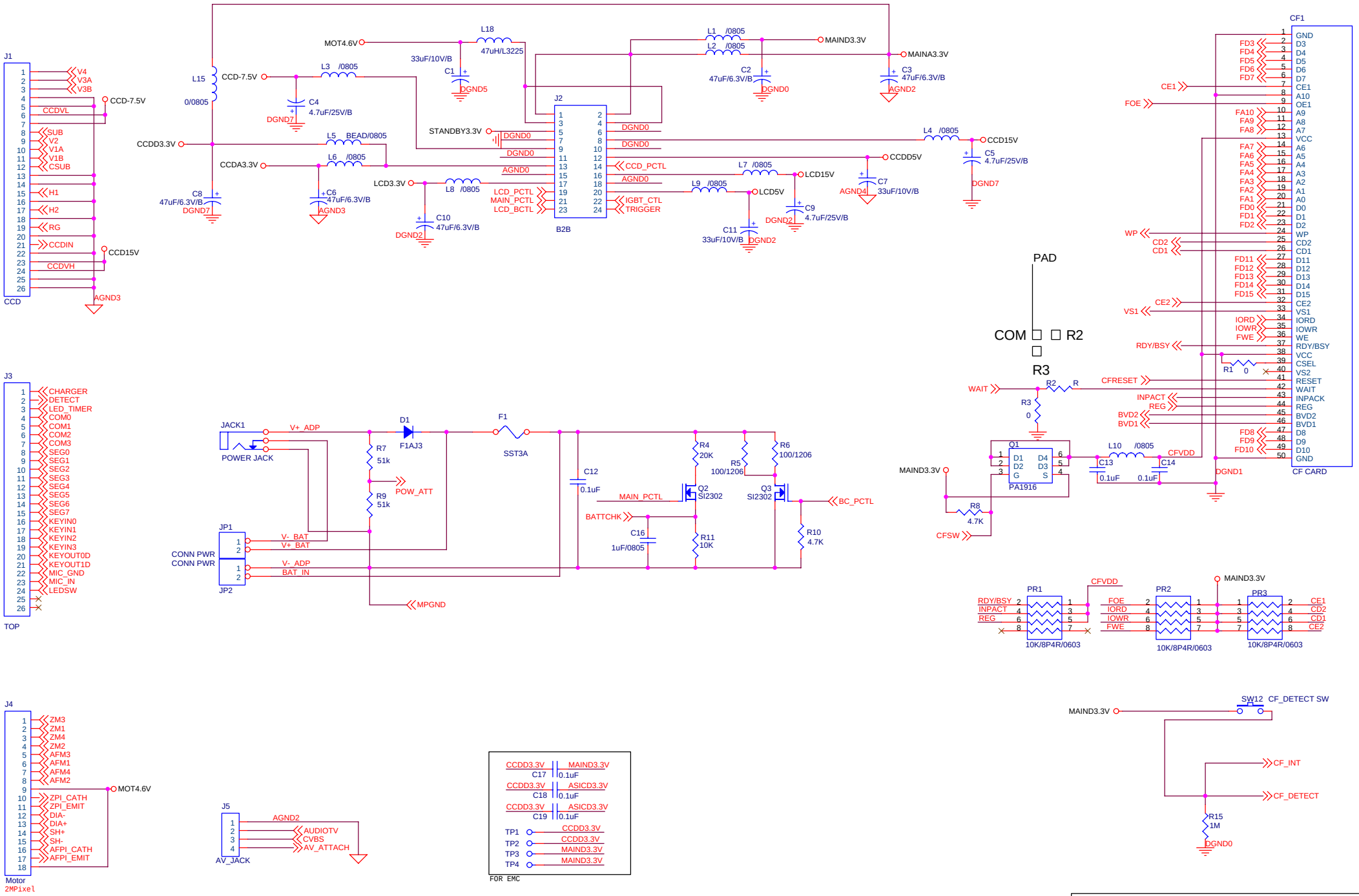

Title	CONNECTOR
Size A3	Document Number <Doc>
Rev	1.3
Date:	Tuesday, June 11, 2002
Sheet	1 of 7

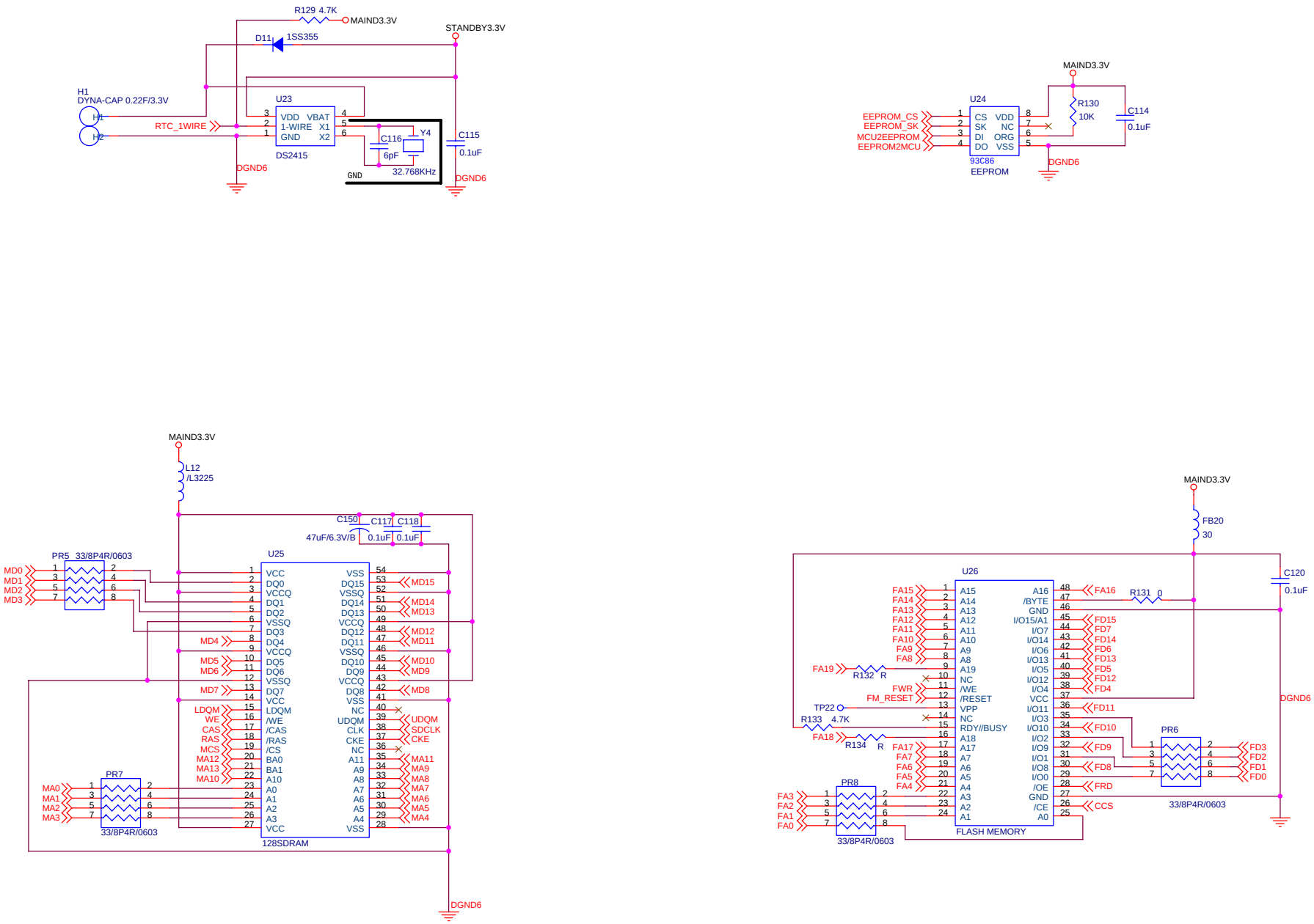

Title	SDRAM/FLASH MEMORY/RTC/EEPROM	
Size A3	Document Number <Doc>	Rev 1.3
Date: Tuesday, June 11, 2002	Sheet 6 of 7	

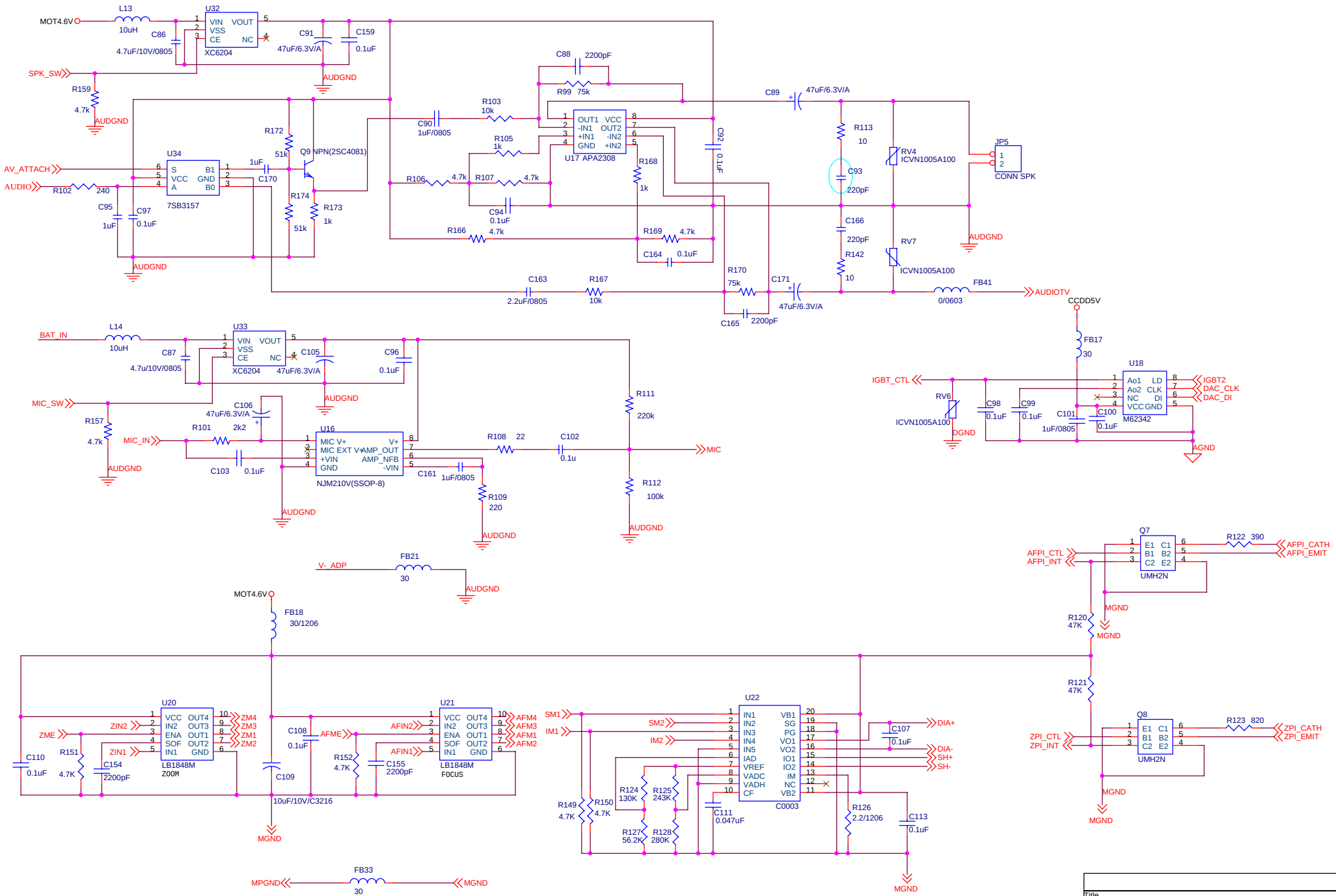

Title	MOTOR/IGBT/AUDIO	
Size A3	Document Number <Doc>	Rev 1.3
Date: Tuesday, June 11, 2002	Sheet 5 of 7	

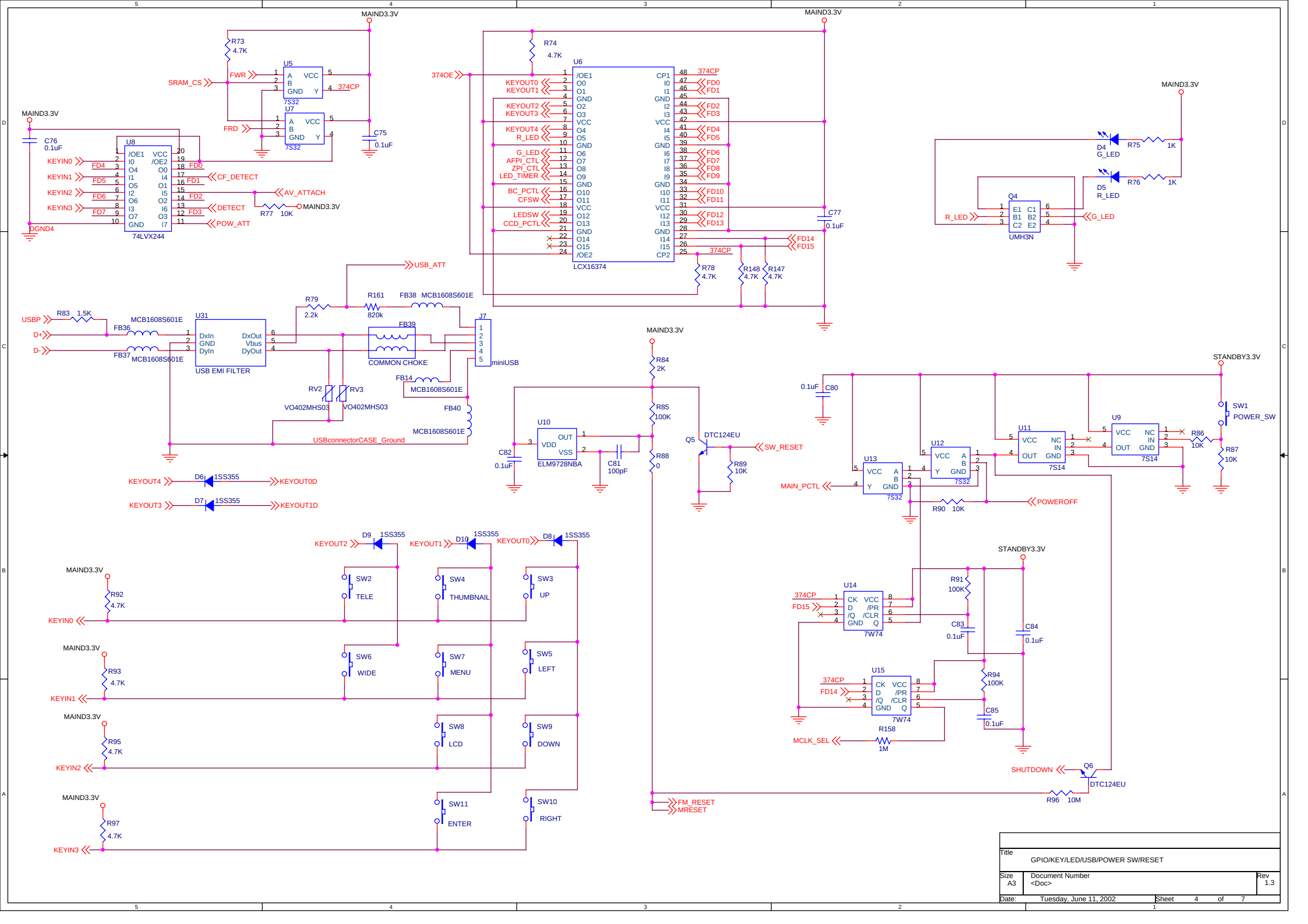
MAIND3.3V
R73
4.7K
U5
7S32
U7
7S32
SRAM_CS
FWR
FRD
374CP
C75
0.1uF
C76
0.1uF
U8
74LVX244
KEYIN0
KEYIN1
KEYIN2
KEYIN3
FD4
FD5
FD6
FD7
FD0
FD1
FD2
FD3
CF_DETECT
AV_ATTACH
DETECT
POW_ATT
R77
10K
DGND4
R74
4.7K
374OE
U6
LCX16374
KEYOUT0
KEYOUT1
KEYOUT2
KEYOUT3
KEYOUT4
R_LED
G_LED
AFPI_CTL
ZPI_CTL
LED_TIMER
BC_PCTL
CFSW
LEDSW
CCD_PCTL
FD8
FD9
FD10
FD11
FD12
FD13
FD14
FD15
C77
0.1uF
R78
4.7K
R148
4.7K
R147
4.7K
D4
G_LED
R75
1K
D5
R_LED
R76
1K
Q4
UMH3N
USB_ATT
USBP
D+
D-
R83
1.5K
FB36
MCB1608S601E
FB37
U31
USB EMI FILTER
R79
2.2k
R161
820k
FB38
FB39
COMMON CHOKE
J7
miniUSB
FB14
RV2
RV3
VO402MHS03
FB40
USBconnectorCASE_Ground
R84
2K
R85
100K
R88
0
U10
ELM9728NBA
C82
0.1uF
C81
100pF
Q5
DTC124EU
SW_RESET
R89
10K
STANDBY3.3V
C80
0.1uF
U11
7S14
U9
7S14
SW1
POWER_SW
R86
10K
R87
10K
U12
7S32
U13
7S32
MAIN_PCTL
R90
10K
POWEROFF
D6
1SS355
KEYOUT0D
D7
1SS355
KEYOUT1D
D9
D10
D8
SW2
TELE
SW4
THUMBNAIL
SW3
UP
R92
4.7K
SW6
WIDE
SW7
MENU
SW5
LEFT
R93
4.7K
SW8
LCD
SW9
DOWN
R95
4.7K
SW11
ENTER
SW10
RIGHT
R97
4.7K
U14
7W74
R91
100K
C83
0.1uF
C84
0.1uF
U15
7W74
R94
100K
C85
0.1uF
R158
1M
MCLK_SEL
SHUTDOWN
Q6
DTC124EU
R96
10M
FM_RESET
MRESET
Title
GPIO/KEY/LED/USB/POWER SW/RESET
Size
A3
Document Number
<Doc>
Rev
1.3
Date:
Tuesday, June 11, 2002
Sheet
4
of
7

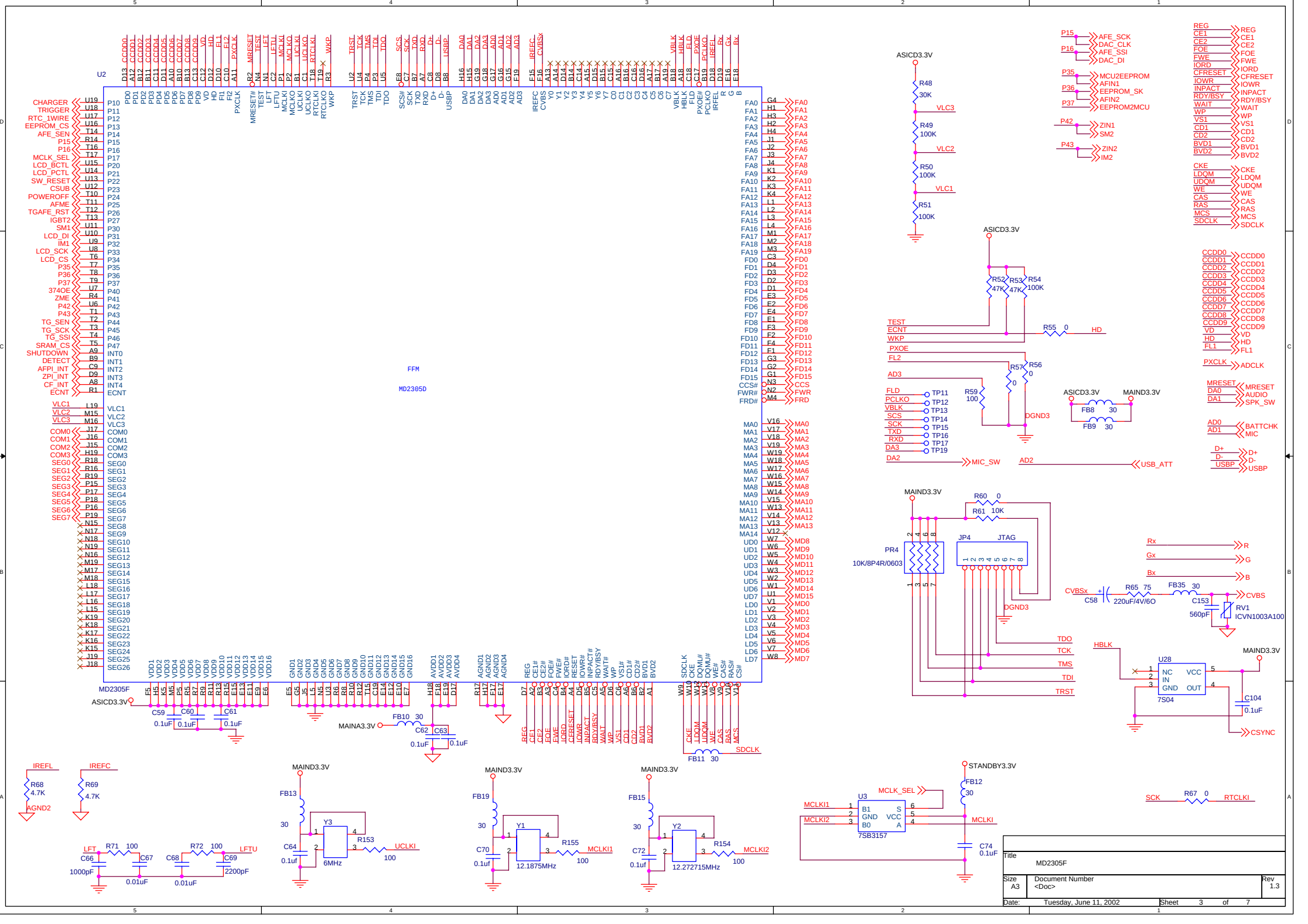

U2
FFM
MD2305D
MD2305F
ASICD3.3V
MAIND3.3V
MAINA3.3V
STANDBY3.3V
U3
7SB3157
U28
7S04
JP4
JTAG
PR4
10K/8P4R/0603
Y3
6MHz
Y1
12.1875MHz
Y2
12.272715MHz
RV1
ICVN1003A100
Title
MD2305F
Size
A3
Document Number
<Doc>
Rev
1.3
Date:
Tuesday, June 11, 2002
Sheet
3
of
7

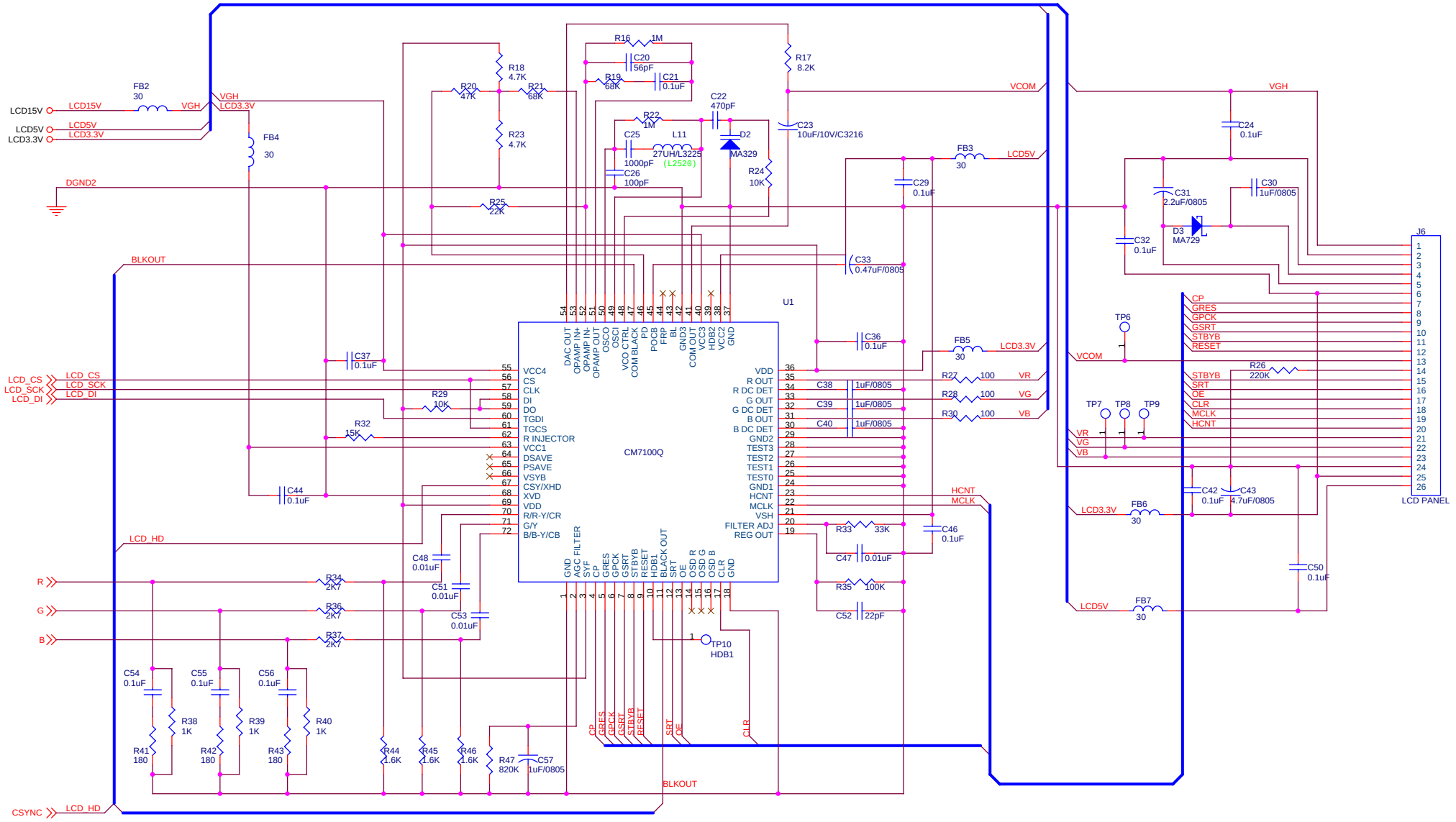

Title	LCD	
Size A3	Document Number <Doc>	Rev 1.3
Date: Tuesday, June 11, 2002	Sheet 2 of 7	

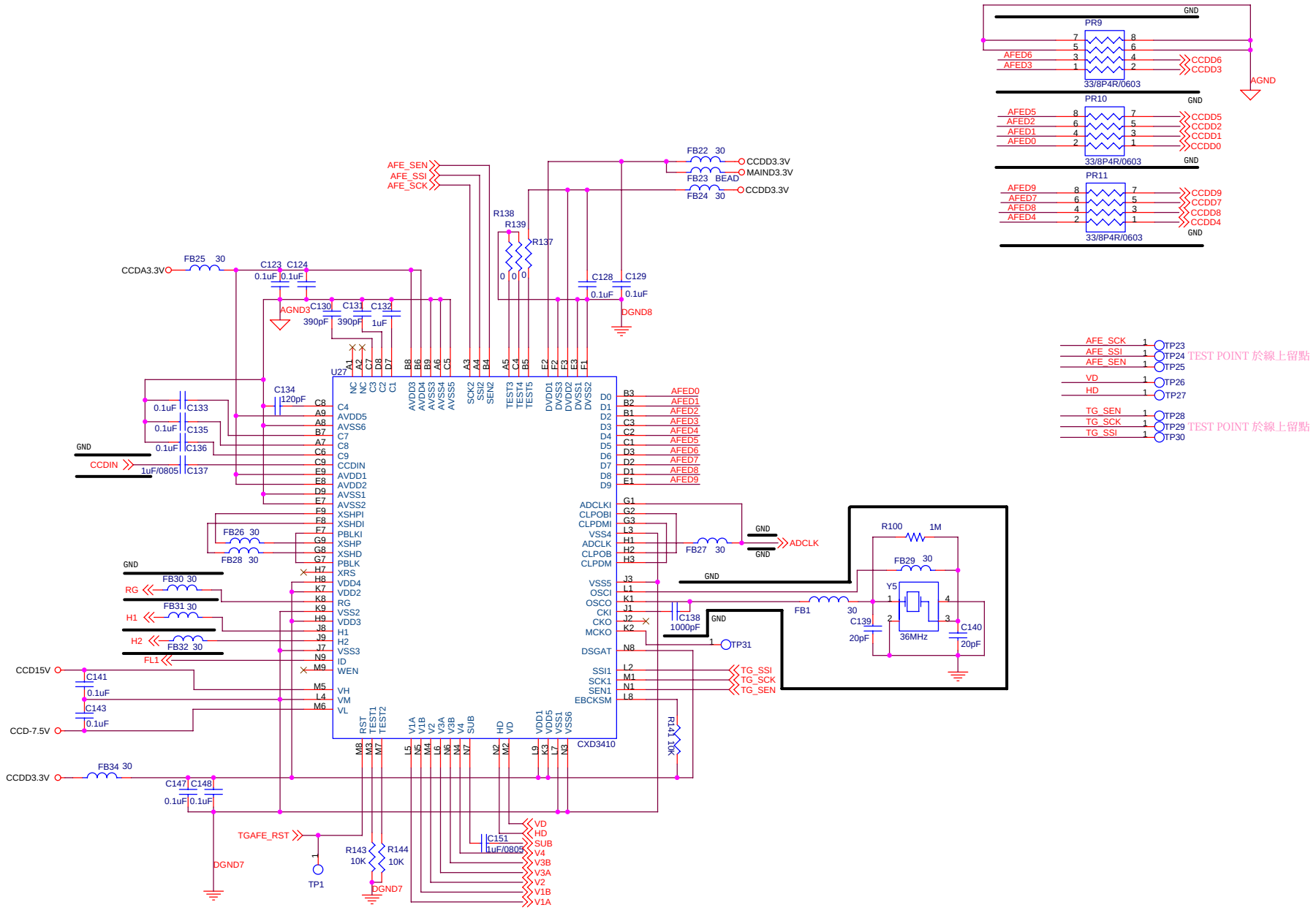

FB33,R140,R142,R145,R146,TP31,C149 DELETE

Title	TG/VD/AFE	
Size A3	Document Number <Doc>	Rev 1.3
Date: Tuesday, June 11, 2002	Sheet 7 of 7	

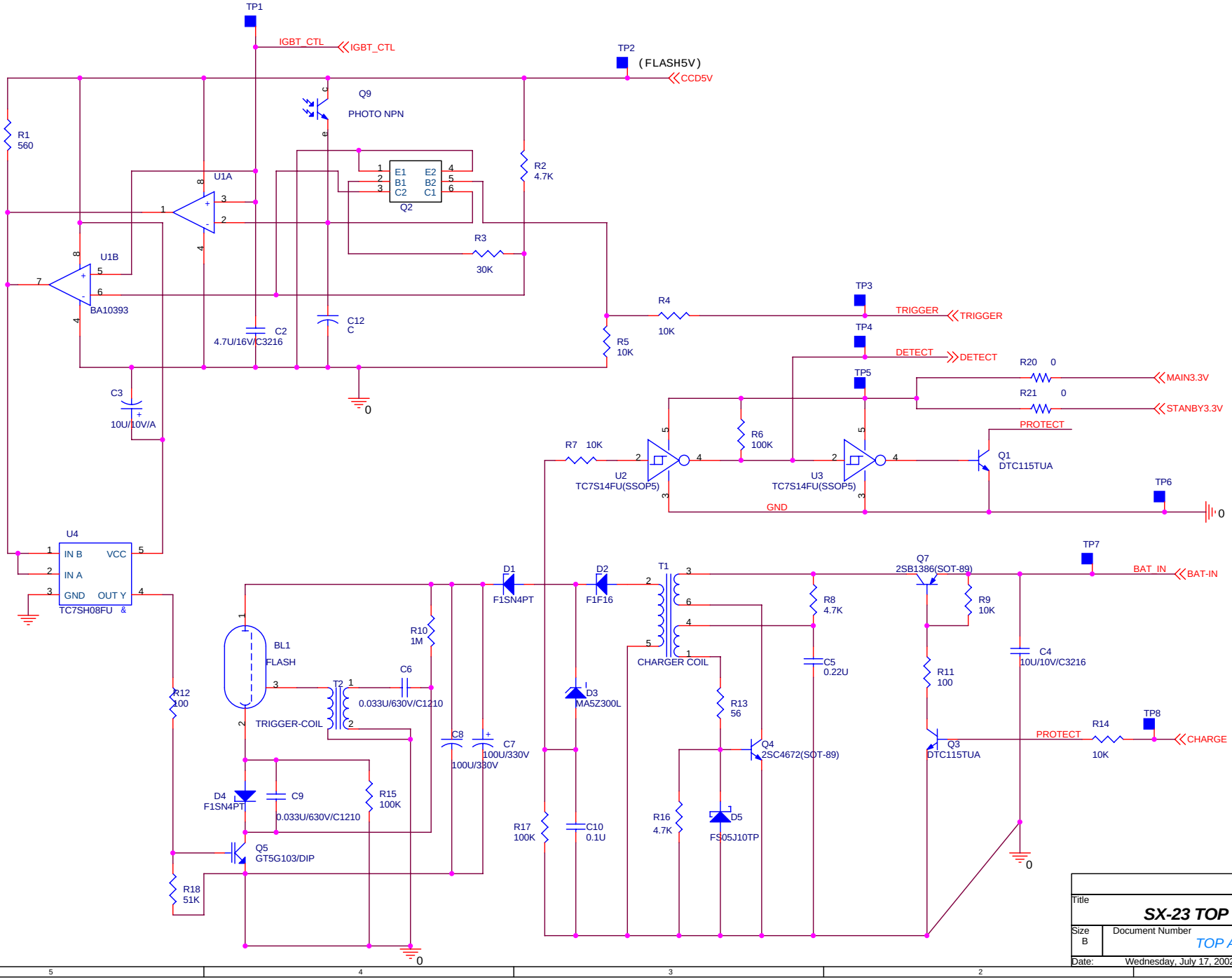

Title	**SX-23 TOP**		
Size B	Document Number *TOP AND FLASH*		Rev 1.2
Date: Wednesday, July 17, 2002		Sheet 1 of 2	

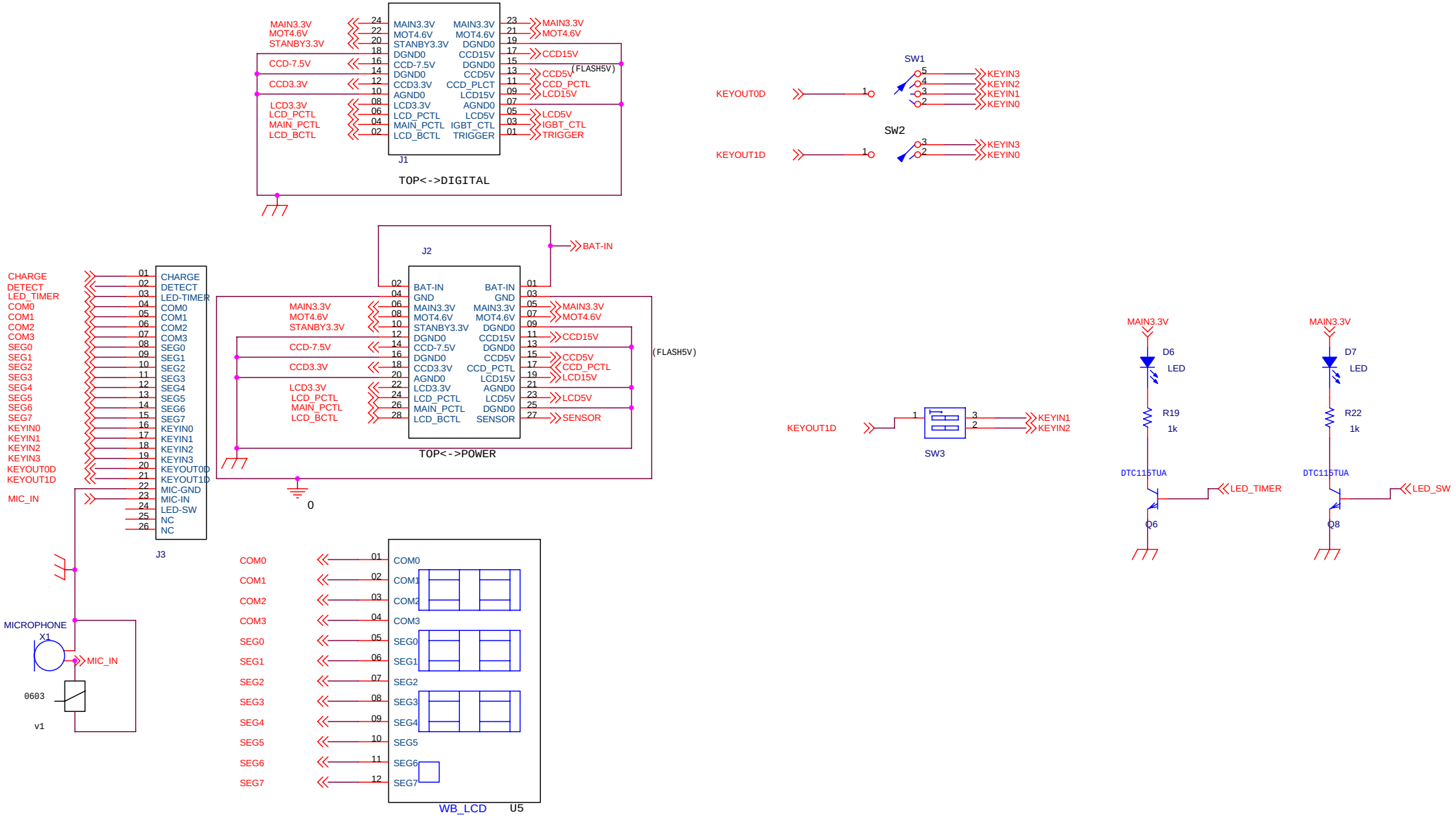

Title	FLASH-TOP
Size B	Document Number <Doc> SX-23
Rev	1.2
Date:	Wednesday, July 17, 2002
Sheet	2 of 2

.

C.1-2 PCB DIAGRAM

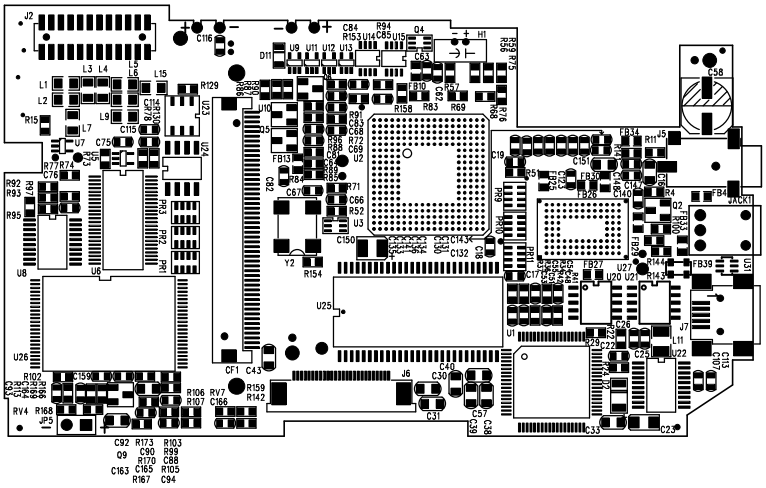

SKANHEX INC.		DATE	2002.0425
PCB NAME	23D1_3.PCB	REV.	1.3
DRAW NO	320-210004-13	SCALE	
SIDE	L25 SILKSCREEN TOP		
LAYOUT BY: SC		SCHEMATIC BY: Yiwen	
MODIFY BY: Lilian		MECHANICAL BY: Seaweed	

23d1_3.pcb - Tue Jul 23 14:51:02 2002

	SKANHEX INC.	DATE	2002.0425
PCB NAME	23D1_3.PCB	REV.	1.3
DRAW NO	320-210004-13	SCALE	
SIDE	L26 SILKSCREEN BOT		
LAYOUT BY:	SC	SCHEMATIC BY:	Yiwen
MODIFY BY:	Lilian	MECHANICAL BY:	Seaweed

(D) PARTS LIST

D.1-1 ELECTRON

SX23 DIGITAL BOARD

Parts No	Parts Name	Spec	Q'ty	Symbol
000-000160-00	RES,CHIP,5%,1/16W,(0603),SMD	0	7	R1,3,12,55,60,88,131
000-000260-00	RES,CHIP,5%,1/8W,(0805),SMD	0	2	FB14,L15
000-000360-00	RES,CHIP,5%,1/4W,(1206),SMD	0	1	L18
000-020360-20	RES,CHIP,5%,1/4W,(1206),SMD	2.2	1	R126
000-100160-00	RES,CHIP,5%,1/16W,(0603),SMD	10	2	R113,142
000-101160-00	RES,CHIP,5%,1/16W,(0603),SMD	100	9	R27,28,30,59,71,72,153,154,155
000-101340-00	RES,CHIP,1%,1/4W,(1206),SMD	100	2	R5,6
000-102140-00	RES,CHIP,1%,1/16W,(0603),SMD	1K	1	R168
000-102160-00	RES,CHIP,5%,1/16W,(0603),SMD	1K	7	R38,39,40,75,76,105,173
000-103140-00	RES,CHIP,1%,1/16W,(0603),SMD	10K	2	R11,167
000-103160-00	RES,CHIP,5%,1/16W,(0603),SMD	10K	13	R24,29,61,77,86,87,89,90,103,130,141,143,144
000-104160-00	RES,CHIP,5%,1/16W,(0603),SMD	100K	9	R35,49,50,51,54,85,91,94,112
000-105160-00	RES,CHIP,5%,1/16W,(0603),SMD	1M	5	R15,16,22,100,158
000-106160-00	RES,CHIP,5%,1/16W,(0603),SMD	10M	1	R96
000-134140-00	RES,CHIP,1%,1/16W,(0603),SMD	130K	1	R124
000-152160-00	RES,CHIP,5%,1/16W,(0603),SMD	1.5K	1	R83
000-153160-00	RES,CHIP,5%,1/16W,(0603),SMD	15K	1	R32
000-162160-00	RES,CHIP,5%,1/16W,(0603),SMD	1.6K	3	R44,45,46
000-181160-00	RES,CHIP,5%,1/16W,(0603),SMD	180	3	R41,42,43

Parts No	Parts Name	Spec	Q'ty	Symbol
000-183140-00	RES,CHIP,1%,1/16W,(0603),SMD	18K	1	R68
000-202160-00	RES,CHIP,5%,1/16W,(0603),SMD	2K	1	R84
000-203140-00	RES,CHIP,1%,1/16W,(0603),SMD	20K	1	R4
000-204140-00	RES,CHIP,1%,1/16W,(0603),SMD	200K	1	R79
000-220160-00	RES,CHIP,5%,1/16W,(0603),SMD	22	1	R108
000-221160-00	RES,CHIP,5%,1/16W,(0603),SMD	220	1	R109
000-222140-00	RES,CHIP,1%,1/16W,(0603),SMD	2.2K	1	R101
000-223160-00	RES,CHIP,5%,1/16W,(0603),SMD	22K	1	R25
000-224160-00	RES,CHIP,5%,1/16W,(0603),SMD	220K	2	R26,111
000-241160-00	RES,CHIP,5%,1/16W,(0603),SMD	240	1	R102
000-244144-00	RES,CHIP,1%,1/16W,(0603),SMD	243K	1	R125
000-272160-00	RES,CHIP,5%,1/16W,(0603),SMD	2.7K	3	R34,36,37
000-284140-00	RES,CHIP,1%,1/16W,(0603),SMD	280K	1	R128
000-303160-00	RES,CHIP,5%,1/16W,(0603),SMD	30K	1	R48
000-304140-00	RES,CHIP,1%,1/16W,(0603),SMD	300K	1	R161
000-333160-00	RES,CHIP,5%,1/16W,(0603),SMD	33K	1	R33
000-391160-00	RES,CHIP,5%,1/16W,(0603),SMD	390	1	R122
000-472160-00	RES,CHIP,5%,1/16W,(0603),SMD	4.7K	25	R8,10,18,23,73,74,78,92,93,95,97,106,107,129,133
000-472160-00	RES,CHIP,5%,1/16W,(0603),SMD	4.7K	25	R147~152,157,159,166,169
000-473160-00	RES,CHIP,5%,1/16W,(0603),SMD	47K	5	R20,52,53,120,121
000-513160-00	RES,CHIP,5%,1/16W,(0603),SMD	51K	4	R7,9,172,174

Parts No	Parts Name	Spec	Q'ty	Symbol
000-563160-00	RES,CHIP,5%,1/16W,(0603),SMD	56K	1	R127
000-682160-00	RES,CHIP,5%,1/16W,(0603),SMD	6.8K	1	R69
000-683160-00	RES,CHIP,5%,1/16W,(0603),SMD	68K	2	R19,21
000-750160-00	RES,CHIP,5%,1/16W,(0603),SMD	75	1	R65
000-753160-00	RES,CHIP,5%,1/16W,(0603),SMD	75K	2	R99,170
000-821140-00	RES,CHIP,1%,1/16W,(0603),SMD	820	1	R123
000-822160-00	RES,CHIP,5%,1/16W,(0603),SMD	8.2K	1	R17
000-824160-00	RES,CHIP,5%,1/16W,(0603),SMD	820K	1	R47
003-103160-00	RES,RES-NETWORK,5%,(0603), SMD	10K x4	4	PR1,2,3,4
003-330160-00	RES,RES-NETWORK,5%,1/16W,(0603),SMD	33x4	7	PR5,6,7,8,9,10,11
010-060110-00	CAP,CHIP,NPO,±0.5pf,50V,(0603),SMD	6pF	1	C116
010-101130-00	CAP,CHIP,NPO,5%,50V,(0603),SMD	100pF	2	C26,81
010-102130-00	CAP,CHIP,NPO,5%,50V,(0603),SMD	1nF	3	C25,66,138
010-103140-00	CAP,CHIP,X7R,±10%,50V,(0603),SMD	0.01uF	6	C47,48,51,53,67,68
010-104140-00	CAP,CHIP,X7R,10%,50V,(0603),SMD	0.1uF	52	C12,21,24,29,32,36,37,42,44,46,50,54~56,59~64,70
010-104140-00	CAP,CHIP,X7R,10%,50V,(0603),SMD	0.1uF	52	C72,74,82,92,94,96,97,98,100,102,103,107,108,110
010-104140-00	CAP,CHIP,X7R,10%,50V,(0603),SMD	0.1uF	52	C113,117,118,120,124,128,129,133,135,136,141,143
010-104160-00	CAP,CHIP,Y5V,+80%~-20%,50V,(0603),SMD	0.1uF	16	C13,14,17,18,19,75,76,77,80,83,84,85,99,104,114,115
010-105160-00	CAP,CHIP,Y5V,+80%~-20%,10V,(0603),SMD	1uF	1	C132
010-105240-00	CAP,CHIP,X7R,10%,16V,(0805),SMD	1uF	8	C16,38,39,40,90,101,137,161
010-105260-00	CAP,CHIP,Y5V,+80%~-20%,16V,(0805),SMD	1uF	2	C95,170

Parts No	Parts Name	Spec	Q'ty	Symbol
010-105260-01	CAP,CHIP,Y5V,+80%~-20%,25V,(0805),SMD	1uF	3	C30,57,151
010-106360-00	CAP,CHIP,Y5V,+80%~-20%,10V,(1206),SMD	10uF	2	C23,109
010-121130-00	CAP,CHIP,NPO,5%,50V,(0603),SMD	120pF	1	C134
010-200130-00	CAP,CHIP,NPO,5%,50V,(0603),SMD	20pF	2	C139,140
010-220130-00	CAP,CHIP,NPO,5%,50V,(0603),SMD	22pF	2	C52,78,79
010-221140-00	CAP,CHIP,X7R,10%,50V,(0603),SMD	220pF	2	C93,166
010-222140-00	CAP,CHIP,X7R,10%,50V,(0603),SMD	2200pF	5	C69,88,154,155,165
010-225260-00	CAP,CHIP,Y5V,+80%~-20%,16V,(0805),SMD	2.2uF	2	C31,163
010-391130-00	CAP,CHIP,NPO,5%,50V,(0603),SMD	390pF	2	C130,131
010-471140-00	CAP,CHIP,X7R,10%,50V,(0603),SMD	470pF	1	C22
010-473140-00	CAP,CHIP,X7R,±10%,50V,(0603),SMD	0.047uF	1	C111
010-474240-00	CAP,CHIP,X7R,10%,25V,(0805),SMD	0.47uF	1	C33
010-475260-00	CAP,CHIP,Y5V,+80%~-20%,10V,(0805),SMD	4.7uF	3	C43,86,87
010-560130-00	CAP,CHIP,NPO,5%,50V,(0603),SMD	56pF	1	C20
010-561140-00	CAP,CHIP,X7R,10%,50V,(0603),SMD	560pF	1	C153
013-336150-00	CAP,TANT,±20%,10V,(B),SMD	33uF	3	C1,7,11
013-475150-00	CAP,TANT,±20%,25V,(B),SMD	4.7uF	3	C4,5,9
013-476060-00	CAP,TANT,+80%~-20%,6.3V,(A),SMD	47uF	5	C89,91,105,106,171
013-476150-00	CAP,TANT,±20%,6.3V,(B),SMD	47uF	6	C2,3,6,8,10,150
014-227350-01	CAP,ELEC,±20%,4V,ψ6,SMD	220uF	1	C58
019-22A961-00	CAP,DYNA-CAP,+80%~-20%,3.3V,6.8φ,DIP	0.22F	1	H1

Parts No	Parts Name	Spec	Q'ty	Symbol
020-003201-01	CRYSTAL,32MHZ,20pf,±30PPM,Rsmax=20Ω	(3.5x6x1)	1	Y5
020-327680-04	CRYSTAL,32.768KHZ,12.5pf,±20PPM	(2.0x6.0)	1	Y4
021-000601-A1	OSC,6MHZ,3.3V,±50PPM,SMD	(7.0x5.0x1.4)	1	Y3
021-121881-A2	OSC,12.1875MHZ,3.3V,±50PPM,SMD	(7.0x5.0x1.4)	1	Y1
021-122781-A2	OSC,12.272715MHZ,3.3V,±50PPM,SMD	(7.0x5.0x1.4)	1	Y2
030-106330-A0	IND,WIRE-WOUND,±5%,(322522),SMD	10uH	2	L13,14
030-276330-B0	IND,WIRE-WOUND,±5%,(322522),SMD	27uH	1	L11
030-476330-A0	IND,WIRE-WOUND,±5%,(322522),SMD	47uH	1	FB18
033-000012-00	IND,FERRITE BEAD,MCB2012S320I,	(0805),SMD	10	L1,2,3,4,5,6,7,9,10,11
033-000013-00	IND,FERRITE BEAD,MCB1608S300I,	(0603),SMD	30	FB1~12,13,15,17,19~22,24~28,30~32,33,34,35
033-000020-00	IND,FERRITE BEAD,MCB1608S601E	(0603),SMD	2	FB38,41
033-000021-00	IND,EMI FILTER,USBUF01W6,SMD	SOT323-6	1	U31
033-000026-A0	IND,FERRITE BEAD,FB11-201209-221	(0805),SMD	2	FB36,37
100-001400-00	DIODE RECTIFIER,F1SN4TP,SMD	(4.3x2.4x1.8)	1	D1
100-135500-00	DIODE,1SS355,(SOD-323),SMD		6	D6,7,8,9,10,11
101-032900-00	DIODE,VAR-CAP,MA329,MINI-TYPE,	2PIN,SMD	1	D2
102-072900-00	DIODE,SCHOTTKY,MA729,S-MINI TYPE	2PIN,SMD	1	D3
110-000020-00	TRANS,NPN,DUAL,UMH2N,(SC-88)		2	Q7,8
110-001240-00	TRANS,NPN,DTC124EU,(UMT3),SMD		2	Q5,6
110-042160-00	TRANS,NPN,XP04216,(SC-88),SMD		1	Q4
110-240810-00	TRANS,NPN,2SC4081,(UMT3),SMD		1	Q9

Parts No	Parts Name	Spec	Q'ty	Symbol
111-023020-00	TRANS,MOSFET,N-CHANEL,SI2302DS,SMD	(SOT-23)	2	Q2,3
120-007048-01	IC,CMOS,TC7S04FU,1-INPUT GATE,(SSOP)	(SSOP5-P-0.65A)	1	U28
120-007148-00	IC,TTL,TC7S14FU,(SSOP-5),SMD	(SSOP-5-P-0.65A)	2	U9,11
120-007328-00	IC,CMOS,NC7S32,2-INPUT GATE,(SSOP)	(SC70-MAA0.5A-0)	4	U5,7,12,13
120-007748-00	IC,CMOS,TC7W74FU,(SSOP8-P-0.65A)		2	U14,15
120-023055-01	IC,MCU,MD2305F,(FLEX BGA-280PIN-0.8mm)		1	U2
120-024159-00	IC,RTC,DS2415,(TSOC-6),SMD		1	U23
120-034109-00	IC,TG,CXD3410GA,(LFLGA 96PIN)		1	U27
120-623421-00	IC,DAC,M62342FP,(SOP8-P-225-1.27),SMD		1	U18
120-741639-00	IC,TTL,74LCX16374,(TSSOP-0.5mm-48PIN)	SMD	1	U6
120-742449-00	IC,TTL,74LCX244,(TSSOP-0.65mm-20PIN)	SMD	1	U8
121-021109-00	IC,MIC AMPLIFIER,NJM2110M,(DMP8)	SMD	1	U16
121-023089-00	IC,CLASS AB STEREO HEADPHONE DRIVER	APA2308A,(SO-8)	1	U17
121-620439-00	IC,REGULATOR,XC6204B332MR,	(SOT-25)	2	U32,33
121-731579-00	IC,ANALOG,SWITCH,NC7SB3157P6X,	(MAA06A),SMD	2	U3,34
122-981217-00	IC,SDRAM,2Mx4BANKSx16BIT,(W981216BH-75)	(TSOP)	1	U25
126-710019-00	IC,LCD CONTROLLER,CM7100L1	(TQFP-72),SMD	1	U1
128-000038-00	IC,MOTOR DRIVER,C0003,(20-SSOP-225)	SMD	1	U22
128-018489-00	IC,MOTOR DRIVER,LB1848M,(MFP-10S)	SMD	2	U20,21
128-097289-00	IC,PWR-ON RST,ELM9728NBA	(SOT23)	1	U10
130-000008-00	LED,LTST-150GKT/1206,(GREEN)		1	D4

Parts No	Parts Name	Spec	Q'ty	Symbol
130-000009-00	LED,LTST-150EKT/1206,(RED)		1	D5
222-230090-00	SOCKET,CFC,2x25,PITCH 0635mm,SMD	(PK24-PO50H4-1)	1	CF1
300-210021-01	CONN,FEMALE,2x12,1.27mm,B-B,SMD	(PS3M215-212GBP)	1	J2
300-210010-01	CONN,FEMALE,1x26,0.5mm,FPC,SMD 0°	(FPCB-T-26-20R)	1	J3,6
300-210013-00	CONN,FEMALE,1x26,0.5mm,FFC,SMD 0°	(FPCB-B-26-20T)	1	J1
300-210020-01	CONN,FEMALE,1x18,0.5mm,FPC,SMD 0°	(BC112-18RL)	1	J4
300-310011-00	CONN,FEMALE,1x5,MINI,USB(B),SMD 90°		1	J7
305-010000-00	CONN,FEMALE,DC POWER JACK,DIP 0°	(JPD1030-005)	1	JACK1
305-210000-00	CONN,FEMALE,STEREO PHONE JACK,2.5mm	(JAM3221-F01-TR)	1	J5
314-000002-01	SW,PUSH BUTTON,EVQ PLM A15,SMD	4.9x4.9x1.5	11	SW1,2,3,4,5,6,7,8,9,10,11
315-000001-00	SW,SENSOR SW,DT010-P11AB-A-(T),SMD		1	SW12
320-210004-14	FAB,PCB,SX-23,DIGITAL	REV:1.4	1	
330-000003-00	FUSE,125V,SST3A,SMD	(6.1x2.54x2.54)	1	F1
420-210044-00	PLASTIC,CF EJECTOR(PK25-SRH-B)		1	
500-230000-00	SEREW,2.0(φ)x7.0mm,		2	
890-330001-00	IC,SST39VF400A-90-4C-EK ,(B)		1	U26
890-330003-00	IC,EEPROM,CAT93C86S,		1	U24

SX23 POWER BOARD

Parts No	Parts Name	Spec	Q'ty	Symbol
000-000160-00	RES,CHIP,5%,1/16W,(0603),SMD	0	2	R24,44
000-102160-00	RES,CHIP,5%,1/16W,(0603),SMD	1K	5	R22,23,25,30,33
000-103140-00	RES,CHIP,1%,1/16W,(0603),SMD	10K	3	R5,9,11
000-152160-00	RES,CHIP,5%,1/16W,(0603),SMD	1.5K	2	R1,2
000-164140-00	RES,CHIP,1%,1/16W,(0603),SMD	160K	3	R21,32,38
000-202160-00	RES,CHIP,5%,1/16W,(0603),SMD	2K	1	R3
000-203160-00	RES,CHIP,5%,1/16W,(0603),SMD	20K	2	R20,34
000-243160-00	RES,CHIP,5%,1/16W,(0603),SMD	24K	3	R19,28,37
000-253140-50	RES,CHIP,1%,1/16W,(0603),SMD	25.5K	1	R14
000-302160-00	RES,CHIP,5%,1/16W,(0603),SMD	3K	1	R7
000-303160-00	RES,CHIP,5%,1/16W,(0603),SMD	30K	1	R17
000-561160-00	RES,CHIP,5%,1/16W,(0603),SMD	560	1	R4
000-602140-04	RES,CHIP,1%,1/16W,(0603),SMD	6.04K	3	R6,10,12
000-693140-80	RES,CHIP,1%,1/16W,(0603),SMD	69.8K	1	R13
000-913140-00	RES,CHIP,1%,1/16W,(0603),SMD	91K	1	R16
010-104160-00	CAP,CHIP,Y5V,+80%~-20%,50V,(0603),SMD	0.1uF	18	C14,15,18,20,22,30,32,45,47~49,52~54,56,57,59,63
010-105160-00	CAP,CHIP,Y5V,+80%~-20%,10V,(0603),SMD	1uF	2	C25,43
010-105260-00	CAP,CHIP,Y5V,+80%~-20%,16V,(0805),SMD	1uF	2	C64,65
010-120950-00	CAP,CHIP,±20%,3KV,(1808),SMD	12pF	1	C1

Parts No	Parts Name	Spec	Q'ty	Symbol
010-151130-00	CAP,CHIP,NPO,5%,50V,(0603),SMD	150pF	1	C55
010-220130-00	CAP,CHIP,NPO,5%,50V,(0603),SMD	22pF	1	C75
010-334150-00	CAP,CHIP,Y5V,±20%,25V,(0603),SMD	0.33uF	1	C50
010-470130-00	CAP,CHIP,NPO,5%,50V,(0603),SMD	47pF	3	C69,73,74
010-472140-00	CAP,CHIP,X7R,10%,50V,(0603),SMD	4700pF	2	C35,38
010-475260-00	CAP,CHIP,Y5V,+80%~-20%,10V,(0805),SMD	4.7uF	3	C11.33.72
010-560130-00	CAP,CHIP,NPO,5%,50V,(0603),SMD	56pF	1	C46
011-473240-00	CAP,MPC-CAP,±10%,63V,(5.2x4.7),SMD	0.047uF	1	C3
013-105050-00	CAP,TANT,±20%,35V,(A),SMD	1uF	2	C9,26
013-106050-A0	CAP,TANT,±20%,10V,(A),SMD	10uF,(NEC)	3	C23,31,42
013-225050-00	CAP,TANT,±20%,25V,(A),SMD	2.2uF	1	C17
013-226250-B1	CAP,TANT,±20%,20V,(C),SMD	22uF,(NEC)	1	C10
013-227250-00	CAP,TANT,±20%,6.3V,(C),SMD	220uF	2	C12,34
013-336150-A0	CAP,TANT,±20%,10V,(B),SMD	33uF,(NEC)	5	C2,16,36,37,76
013-475150-A0	CAP,TANT,±20%,25V,(B),SMD	4.7uF,(NEC)	6	C4,5,6,7,19,21
013-476150-A0	CAP,TANT,±20%,6.3V,(B),SMD	47uF,(NEC)	2	C13,29
014-227350-A0	CAP,ELEC,±20%,16V,(6.3x7.7),ψ6,SMD	220uF(CV-AX)	1	C61
014-476350-01	CAP,ELEC,±20%,35V,(6.3x6),ψ6,SMD	47uF(CV-AX)	1	C8
030-106330-A0	IND,WIRE-WOUND,±5%,(322522),SMD	10uH(RIVER)	1	L3
030-476330-A0	IND,WIRE-WOUND,±5%,(322522),SMD	47uH(RIVER)	2	L2,4
031-157040-00	IND,POWER CHOKE,±10%(CD43)	150uH	1	L1

Parts No	Parts Name	Spec	Q'ty	Symbol
031-226040-00	IND,POWER CHOKE,±10%(CD43)	22uH	4	L5,6,7,8
032-000009-00	IND,TRANSFORMER,DC/AC CONVERTER	(65A-1003),SMD	1	T2
032-000011-00	IND,TRANSFORMER,DC/AC INVERTER	(00A-0073C),SMD	1	T1
032-000015-00	IND,TRANSFORMER,DC/AC CONVERTER	(65A-1012A),SMD	1	T3
033-000013-00	IND,FERRITE BEAD,MCB1608S300I	(0603),SMD	4	R41,43,L9,10
102-001200-00	DIODE,SCHOTTKY, FS1J2E	(3216,2PIN),SMD	3	D5,11,13
102-051000-00	DIODE,SCHOTTKY, FS05J10TP	(3216,2PIN),SMD	8	D1,3,6,7,9,12,14,15
103-001600-00	DIODE,ZENER, 16V,RLZ16B	(TE11),SMD	2	D4,8
103-008200-00	DIODE,ZENER, 8.2V,RLZ8.2C	(TE11),SMD	1	D2
110-022220-00	TRANS,NPN,SST2222A,(SOT23)	SMD	2	Q7,10
110-039060-00	TRANS,NPN,SST3906,(SOT-23)	SMD	2	Q5
110-218980-00	TRANS,NPN,2SD1898R,(SOT-89)	SMD	3	Q1,2,17
111-001140-00	TRANS,FET,SMALL SIGNAL,DTC114E	KA	1	Q3
111-034000-00	TRANS,MOSFET,N-CHANNEL,A03400	(SOT-23)	2	Q13,15
111-034010-00	TRANS,MOSFET,P-CHANNEL,A03400	(SOT-23)	2	Q12,14
111-034420-00	TRANS,MOSFET,N-CHANNEL,SI3442DV	(TSOP-6),SMD	2	Q6,9
121-038839-00	IC,6-CH DC/DC CONVERTER,MB3883PFV	(FPT-48P-M05)	1	U1
121-098339-00	IC,V-REGULATOR,ELM9833AA	(SOT-89),SMD	1	U2
121-625009-00	IC,REGULATOR,XC62FP5002PR	(SOT-89),SMD	2	U4,6
300-210024-00	CONN,FEMALE,2x14,1.27mm,B2B,SMD 0°	(PS3M215-214GBP)	1	J4

SX23 TOP BOARD

Parts No	Parts Name	Spec	Q'ty	Symbol
000-000160-00	RES,CHIP,5%,1/16W,(0603),SMD	0	2	R20,23
000-101160-00	RES,CHIP,5%,1/16W,(0603),SMD	100	3	R11,12,22
000-102160-00	RES,CHIP,5%,1/16W,(0603),SMD	1K	1	R19
000-103160-00	RES,CHIP,5%,1/16W,(0603),SMD	10K	5	R4,5,7,9,14
000-104160-00	RES,CHIP,5%,1/16W,(0603),SMD	100K	3	R6,15.17
000-105160-00	RES,CHIP,5%,1/16W,(0603),SMD	1M	1	R10
000-303160-00	RES,CHIP,5%,1/16W,(0603),SMD	30K	1	R3
000-472160-00	RES,CHIP,5%,1/16W,(0603),SMD	4.7K	3	R2,8,16
000-513160-00	RES,CHIP,5%,1/16W,(0603),SMD	51K	1	R18
000-560160-00	RES,CHIP,5%,1/16W,(0603),SMD	56	1	R13
000-561160-00	RES,CHIP,5%,1/16W,(0603),SMD	560	1	R1
010-104160-00	CAP,CHIP,Y5V,+80%~-20%,50V,(0603),SMD	0.1uF	1	C10
010-106360-00	CAP,CHIP,Y5V,+80%~-20%,10V,(1206),SMD	10uF	1	C4
	CAP,CHIP,X7R,10%,50V,(0603),SMD	22nF	1	C12
010-224160-00	CAP,CHIP,Y5V,+80%~-20%,16V,(0603),SMD	0.22uF	1	C5
010-333440-00	CAP,CHIP,X7R,±10%,630V,C3225 2J333K,(1210),SMD	0.033uF	2	C6,9
010-475360-00	CAP,CHIP,Y5V,+80%~-20%,16V,(1206),SMD	4.7uF	1	C2
013-106050-01	CAP,TANT,±20%,10V,(A),SMD	10uF	1	C3
036-000000-00	IND,TRANSFORMER,86A-8086A	DIP	1	T1

Parts No	Parts Name	Spec	Q'ty	Symbol
036-000008-00	IND,TRANSFORMER,TRIGGER COIL,TR0434,DIP	DIP	1	T2
100-001400-00	DIODE,RECTIFIER,F1SN4TP,(4.3x2.4x1.8),	SMD	2	D1,4
100-011600-00	DIODE,RECTIFIER,F1F16TP,(4.3x2.4x1.8),	SMD	2	D2
102-051000-00	DIODE,SCHOTTKY,FS05J10TP,(3216,2PIN)	SMD	1	D5
103-530000-00	DIODE,ZENER,MA5Z300-L		1	D3
110-000010-01	TRANS,NPNx2,UMX1N,SC74	(S-MINI6),SMD	1	Q2
110-001240-00	TRANS,NPN,DTC124EU,(UMT3),SMD		4	Q1,3,6,8
110-213860-00	TRANS,NPN,2SB1386,(SOT-89)	SMD	1	Q7
110-246720-00	TRANS,PNP,2SC4672,(SOT-89)	SMD	1	Q4
112-001310-00	TRANS,IGBT,GT8G131,SMD		1	Q5
120-007088-01	IC,CMOS,TC7SH08FU,2-INPUT GATE	(SSOP)	1	U4
120-007148-01	IC,TTL,NC7S14,1-INPUT GATE,(SSOP)	(SC70-MAA05A-0.65)	2	U2,3
121-103931-00	IC,COMPARTOR,BA10393F	(SOP-8),SMD	1	U1
130-000008-00	LED,LTST-150GKT/1206,(GREEN)		1	D7
140-000008-00	LCD PANNEL,B/W,TN,22x12.5	(DTE101294ADZ)	1	
150-330000-00	導電橡皮,SI,(SX—32)		1	
300-100008-00	CONN,MALE,2x12,1.27mm,B2B,(PH3RD-212GB	20/50/19(12),DIP,90°	1	J1
300-100009-00	CONN,MALE,2x14,1.27mm,B2B,(PH3RD-214GB	19/60/20(11),DIP,90°	1	J2
300-210013-00	CONN,FEMALE,1x26,0.5mm,FFC,SMD,0°	(FPCB-B-26-20T)	1	J3
314-000010-00	SW,DOUBLE PUSH ACTION,SMD	TC012-PS12BET(T)	1	SW3
320-210006-11	FAB,PCB,SX23 TOP,REV:1.1		1	

Parts No	Parts Name	Spec	Q'ty	Symbol
400-210001-00	Metal, TOP LCD FRAME,SUS-301-CSP-3,(SX-23)		1	
420-210023-00	Plastic, TOP LCD HOLDER,PC+G10%	SX-23	1	
511-017025-30	SCREW,S3X-2,1.7(φ 徑)x2.5mm	長度,染黑	3	

SX23 CCD BOARD

Parts No	Parts Name	Spec	Q'ty	Symbol
000-104160-00	RES,CHIP,5%,1/16W,(0603),SMD	100K	1	R2
000-182160-00	RES,CHIP,5%,1/16W,(0603),SMD	1.8K	1	R5
000-204160-00	RES,CHIP,5%,1/16W,(0603),SMD	200 K	1	R3
000-222140-00	RES,CHIP,1%,1/16W,(0603),SMD	2.2 K	1	R1
000-470160-00	RES,CHIP,5%,1/16W,(0603),SMD	47	1	R4
010-104140-00	CAP,CHIP,X7R,10%,50V,(0603),SMD	0.1uF	6	C2,3,4,6,7,9
010-222140-00	CAP,CHIP,X7R,10%,50V,(0603),SMD	2200pF	1	C5
013-475150-00	CAP,TANT,±20%,25V,(B),SMD	4.7uF	2	C1,8
100-135500-00	DIODE,1SS355,(SOT-323),SMD		1	D1
110-001240-00	TRANS,NPN,DTC124EU,(UMT3),SMD		1	Q1
110-218750-00	TRANS.NPN,2SK1875(UMT3),SMD		1	Q2
322-210001-10	FPC,PCB,SX-23,CCD,REV:1.0		1	

D1-2 MECHANISM

DIGITAL CAMERA			
Parts No	**Parts Name**	**Spec**	**Q'ty**
181-330002-00	MIC	φ6.0x5.0mm,(OBO-06BW-2B-001), 25mm,(SX-23)	1
201-035007-00	WIRE,TOP TO CHARGER CAP CABLE	26AWG,52mm,(BLACK)	1
201-210017-00	WIRE BATTERY(+) TO DIGITAL(+)	(UL3239#26AWG),(RED),50mm	1
203-330000-00	FFC,DIGITAL TO TOP	0.5x26x19xC334,(1x26)	1
400-210002-02	Metal, strap ring,holder	SUS304-CSP	1
400-210003-00	Metal battery cover hinge	SUS-420	1
400-330010-00	Metal, strap ring		1
410-210004-00	MIC RUBBER	RUBBER (BLACK)	1
420-130022-00	Tripod connector	RUBBER (BLACK),PC+G10%	1
511-017035-30	SCREW	S3X-2,1.7(φ)x3.5mm	10
511-017040-30	SCREW	S3X-2,1.7(φ)x4.0mm	3
511-017050-10	SCREW	S3X-2,1.7(φ)x5.0mm	6
511-017050-30	SCREW	S3X-2,1.7(φ)x5.0mm	2
800-210005-11	ASSY,PCBA,SX-23	POWER,REV:1.1	1
800-210006-11	ASSY,PCBA,SX-23	TOP,REV:1.1	1
822-210000-00	DIGITAL BOARD ASS'Y,(SX-23)		1
825-210000-00	Front cover ASS'Y,(SX-23)		1
826-210000-00	Back cover ASS'Y,(SX-23)		1
840-210001-00	Barrel cover ASS'Y,(SX\JD-2100Z3s)		1
860-210001-00	Battery cover ASS'Y,(SX-23)		**1**
861-210000-00	Body ASS'Y,(SX-23)		1
863-210000-00	Reflector ASS'Y,(SX-23)		

DIGITAL BOARD ASS'Y			
Parts No	**Parts Name**	**Spec**	**Q'ty**
141-000002-00	LCD, COLOR LCD PANEL	TFT, 1.6",COM16T1130	1
180-330003-00	MICRO SPERKER	SG-1708M11,8Ω	1
201-210008-01	WIRE POWER TO LCD (BACKLIGHT V+)	(UL3239#24),(RED,75mm	1
201-210009-00	WIRE POWER TO LCD (BACKLIGHT V-)	(UL3239#24),(WHITE),50mm	1
410-210005-01	SPEAKER RUBBER (black),(SX-23)	RUBBER, (BLACK),(SX-23)	1
420-210022-01	1.6"LCD Holder	ABS,(SX-23)	1
420-210044-00	CF ejector	(PK25-SRH-B)	2
500-230000-00	SCREW	2.0(φ)x7.0mm	3
511-014035-30	SCREW	S3X-2,1.4(φ)x3.5mm	1
800-210004-10	ASSY,PCBA,SX-23,DIGITAL,REV:1.1	ASSY, PCBA,SX-23,DIGITAL,REV:1.1	1

LENS ASS'Y

Parts No	Parts Name	Spec	Q'ty
121-002840-00	IC, CCD SENSOR	IC, ICX284AQ, CCD SENSOR, 16PIN,DIP	1
400-210007-00	METAL, HEAT SINKER, A1050P	METAL, HEAT SINKER, A1050P	1
410-210002-01	RUBBER, LPF, SILICON	RUBBER, LPF, SILICON	1
431-210001-00	LENS MODULE	SAMSUNG DSC 2M3X-SS-2327	1
433-230000-00	LOW PASS FILTER, QUARTZ	QUARTZ	1
511-014040-30	SCREW	S3X-2,1.4(ϕ)x4.0mm	2
802-210001-10	ASSY, PCBA, FPC, SX-23, CCD,,REV:1.0	ASSY, PCBA, FPC, SX-23, CCD,,REV:1.0	1

FRONT COVER ASS’Y

Parts No	Parts Name	Spec	Q’ty
400-230029-00	Metal, front dial click	C5210P-SH	1
401-330000-02	Metal, SB button SP	SUS304-WPB,	1
410-210003-00	Rubber, grip, RUBBER,(black),(SX-23)	RUBBER,(black)	1
420-210001-03	Plastic, Front cover	ABS50%+PC50%,(大世紀:P79-5256),(SX-23)	1
420-210002-00	Plastic,功能轉盤指示窗	PMMA,(SX-23)	1
420-210003-00	Plastic, TOP LCD window	PMMA,(SX-23)	1
420-210004-00	Plastic, central decoration bar	PC+G10%,(:P79-5265)(SX-23)	1
420-210008-01	Plastic, finder window A	PMMA,(black),(SX-23)	1
420-210009-02	Plastic, strobe window	PMMA,(CP-81UVA),(SX-23)	1
420-210024-00	Tape	tape, SPONGE=1.5,(SX-23)	1
420-330018-01	Plastic, SB button	ABS(747),	1
420-330019-05	Plastic, FD holder	POM,	1
420-330020-03	Plastic, FD plate	Plastic, FD plate, ABS	1
420-330029-01	Plastic, FD cover	Plastic, FD cover, ABS(747)	1
514-014025-30	SCREW	1.4(φ)x2.5mm	1
610-210002-00	Double tape for grip	R35.35xR1xR18.4xR1,SONY T4000	1
610-330006-01	Double tape FD cover	(13.9x 外 18.3mm),(TESA 4965)	8

BATTERY COVER ASS’Y

Parts No	Parts Name	Spec	Q’ty
400-210004-02	Metal, battery contact-A, SUS-304-1/2H	Metal, battery contact-A, SUS-304-1/2H	1
400-210005-02	Metal, battery contact-B, SUS304-1/2H	Metal, battery contact-B, SUS304-1/2H	1
401-210005-00	Metal, battery cover SP, SUS-304-WPB	Metal, battery cover SP, SUS-304-WPB	1
420-210005-03	Plastic, battery cover	PC+G10%,(銀),(大世紀:P79-5256)	1
420-210006-00	Plastic, battery decoration bar,PC+G10%,(銀灰)	Plastic, battery decoration bar,PC+G10%,(銀灰))	1
420-210007-00	Plastic, battery cover button	(銀灰),(大世紀:p79-5265)	1
514-017025-10	SCREW	大平圓頭,1.7(φ徑)x2.5mm(長度),鍍鎳	2

BACK COVER ASS’Y

Parts No	Parts Name	Spec	Q’ty
400-210006-00	Metal, CF cover hinge, SUS-420L	Metal, CF cover hinge, SUS-420L	2
401-210000-00	Metal, CF cover SP, SUS-304-WPB	Metal, CF cover SP, SUS-304-WPB	1
401-210001-01	Metal, ZOOM button SP, SUS-304-CSP-1/2H	Metal, ZOOM button SP, SUS-304-CSP-1/2H	1
401-330000-02	Metal, SB button SP, SUS304-WPB	Metal, SB button SP, SUS304-WPB	1
410-210000-00	RUBBER, EP WINDOW	EP WINDOW, RUBBER	1
410-210001-02	RUBBER, JACK COVER,TPR	RUBBER,JACKCOVER,TPR,(P colgray 8U)(灰	1
420-210010-05	Plastic back cover	ABS50%+PC50%,(銀),(大世紀:P79-5256	1
420-210011-03	Plastic, CF cover	,PC+G10%,(銀),(大世紀:P79-5256)	1
420-210012-00	SCREW	S3X-2,1.4(φ徑)x3.5mm(長度),染黑	1
420-210013-01	Plastic, POWER button, ABS, (red), P1807C	Plastic, POWER button, ABS, (red),P1807C	1
420-210014-02	Plastic, 5WAY button, ABS	Plastic,5WAY button, ABS,(Metal 銀)	1
420-210015-00	Plastic, 1.6"LCDwindow, PMMA	Plastic, 1.6"LCDwindow, PMMA	1
420-210016-01	Plastic, Z00M button, ABS	Plastic,Z00M button, ABS,(金屬銀)	1
420-210017-02	Plastic, MODE button, ABS	Plastic, MODE button, ABS,(金屬銀)	1
420-210046-01	Plastic, LCD-MODE button, ABS	Plastic, LCD-MODE button, ABS	1
610-210000-00	Double tape, 11.0x4.7, finder window	Double tape, 11.0x4.7, finder window,(SONY T4000	2
610-210001-00	Double tape, 7.5x5.0, finder window	Double tape, 7.5x5.0, finder window,(SONY T4000)	1
627-210003-01	LABEL,CF cover tape	LABEL,CF cover tape,(15x6.4-R0.6),(銀)	1

BODY ASS'Y

Parts No	Parts Name	Spec	Q'ty
014-107971-01	CAP	ELEC, -10%~+20%, 330V,(11x34),DIP 2P,100uF	2
110-001260-00	TRANS, NPN, PHOTO, PN126S	TRANS, NPN, PHOTO, PN126S	1
130-000007-00	LED, LTL-16KEE, DIP, (RED)	LED, LTL-16KEE, DIP,(RED)	1
201-210011-00	WIRE FLASH TRIGGER TO TOP	(UL3239#26), (WHITE), (25mm)	1
201-210013-00	WIRE CAPACITOR (+) TO TOP	(UL3239#24), (RED), 45mm	1
201-210014-00	WIRE CAPACITOR (-) TO TOP	(UL3239#24), (BLACK), 40mm	1
201-210017-00	WIRE BATTERY (+) TO DIGITAL (+)	(UL3239#26AWG),(紅),50mm	1
400-210008-02	Metal, battery contact	Metal, battery contac,SUS304-CSP-H,鍍鎳	2
400-210009-03	Metal, battery contact	Metal, battery contact,SUS304-CSP-H,鍍鎳	1
420-210019-06	Plastic, body	PC+G10%,(black	1
420-210021-02	Plastic, IGBT holder, ABS,(black)	Plastic, IGBT holder, ABS,(black)	1
510-014035-30	SCREW	S3X-1,1.4(φ徑)x3.5mm(長度),染黑	2
511-017030-30	SCREW	S3X-2,1.7(φ徑)x3.0mm(長度),染黑	2
610-330008-00	Tape for main condensor	Tape for main condensor ,(25x10mm)	2

REFLECTOR ASS'Y			
Parts No	**Parts Name**	**Spec**	**Q'ty**
131-000007-00	FLASH TUBEL	FLASH TUBE, L=23,2.3φ,(D_2314E)	1
151-130000-00	Conductive tape	Conductive tape	1
201-210010-00	WIRE FLASH TUBE (+) TO TOP	(UL3239#24),(紅),30mm	1
201-210011-00	WIRE FLASH TRIGGER TO TOP	(UL3239#26),(白),25mm	1
201-330015-00	WIRE TOP TO FLASH TUBE CABLE,	4AWG, 20mm, (UL3239),(black)	1
400-330012-00	Metal, reflector holder, MIRO 2 T0.3	Metal, reflector holder, MIRO2 T0.3	1
410-330002-00	RUBBER, O ring	RUBBER, O ring	1
420-210020-00	Plastic, reflector holder, ABS	Plastic, reflector holder, ABS	1
610-130000-01	No Conductive tape	No Conductive tape	1

E. Repair

E.1Tools

Tool	Description	Remark
Screw Driver		
Clamp		
Power supply		
Discharger	1K ohm/5W	
Multi -meter		
Adaptor	6V,2A	
USB cable		
CF card		
Scope		
Soldering iron		

E2 PCB DISASSEMBLY

E2-1 DISASSEMBLY DIGITAL BOARD

Disassembly the connect

Dis-solder 6 point

Disassembly 3 screw

Take out the DIGITAL BOARD from body

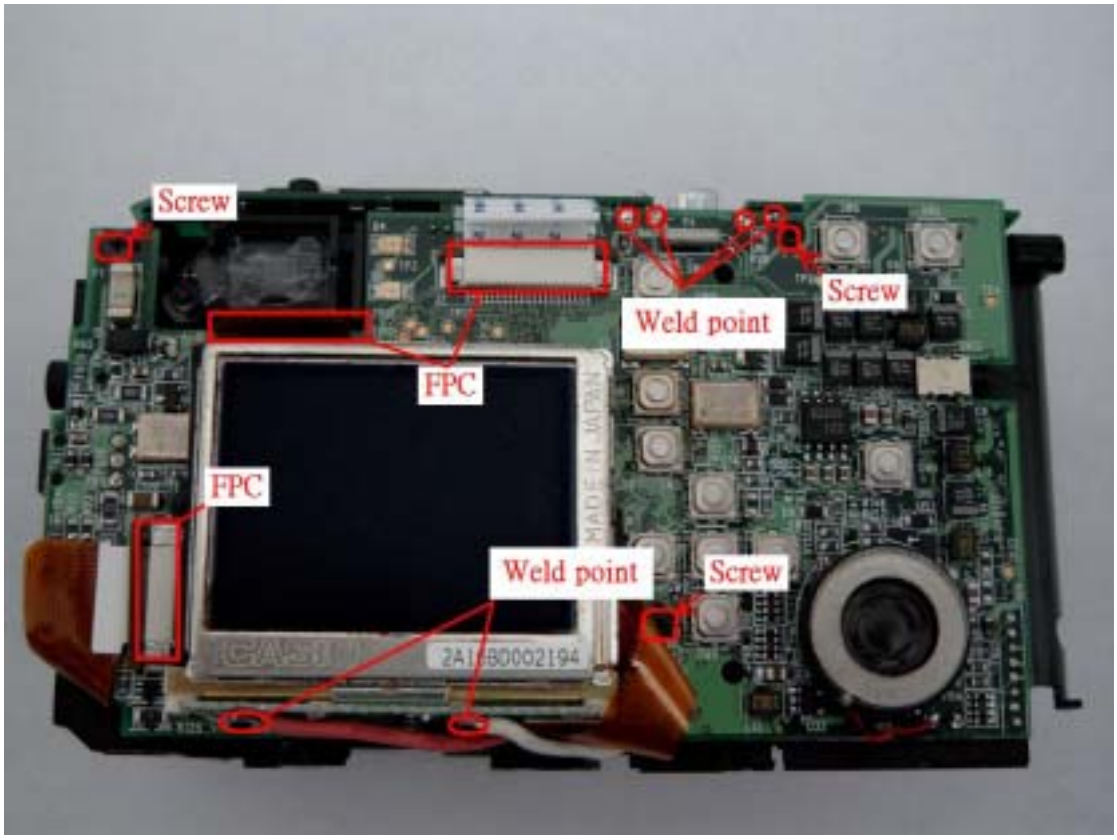

E2-2 DISASSEMBLY POWER BOARD

Dis-solder 4 point

Disassembly 3 screw

Take out the POWER BOARD from body

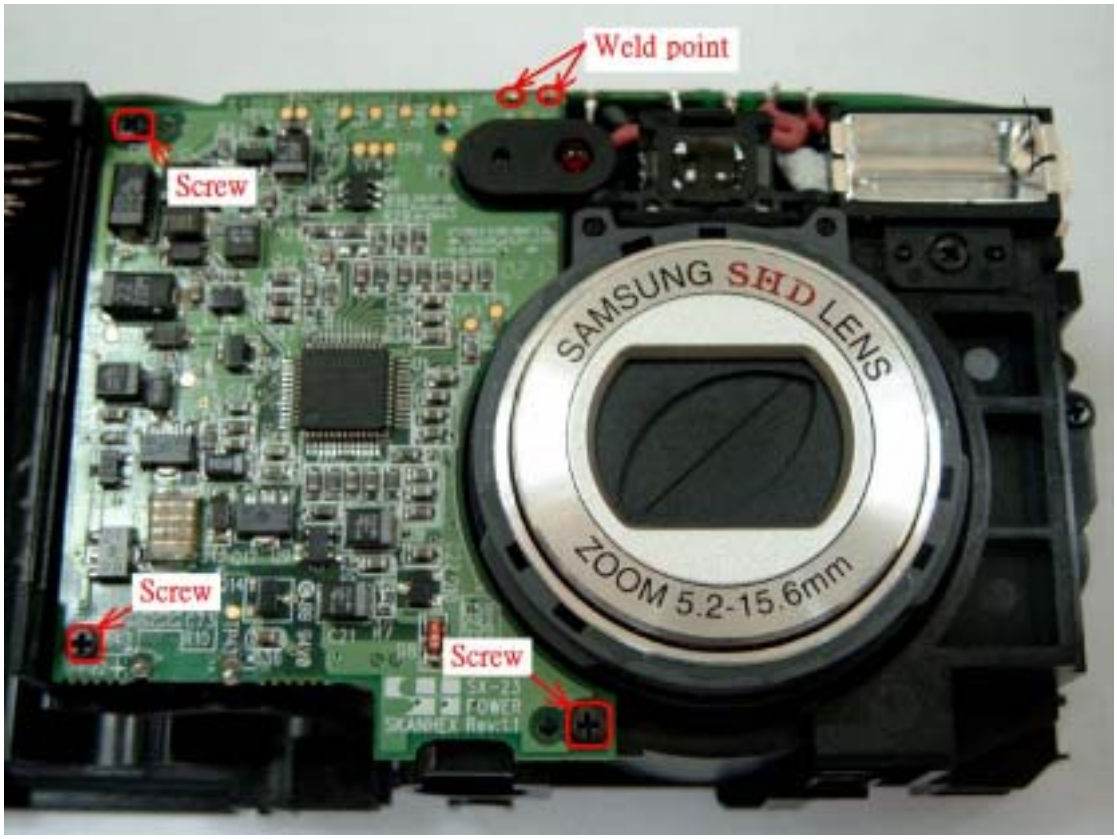

E2-3 DISASSEMBLY TOP BOARD

Dis-solder 10 point

Disassembly 2 screw

Take out the TOP BOARD from body

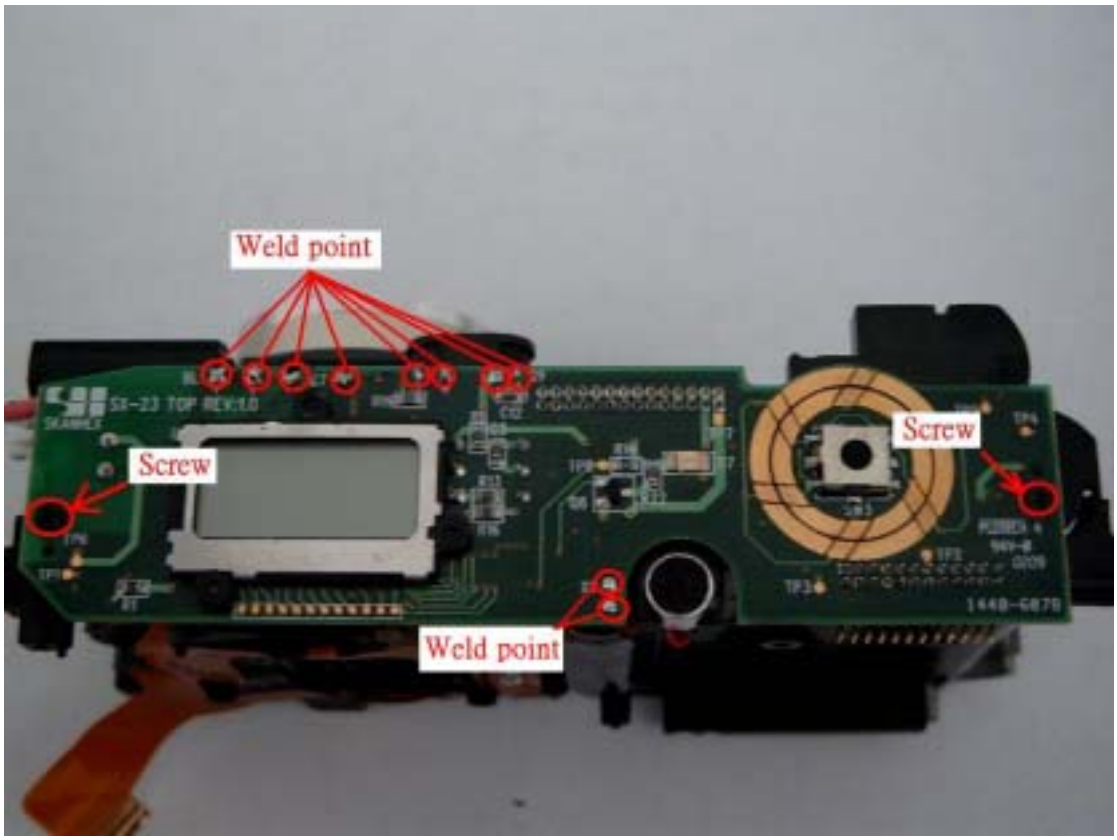

E.3 TROUBLE SHOOTING

E.3-1 POWER ON DIGITAL CAMERA

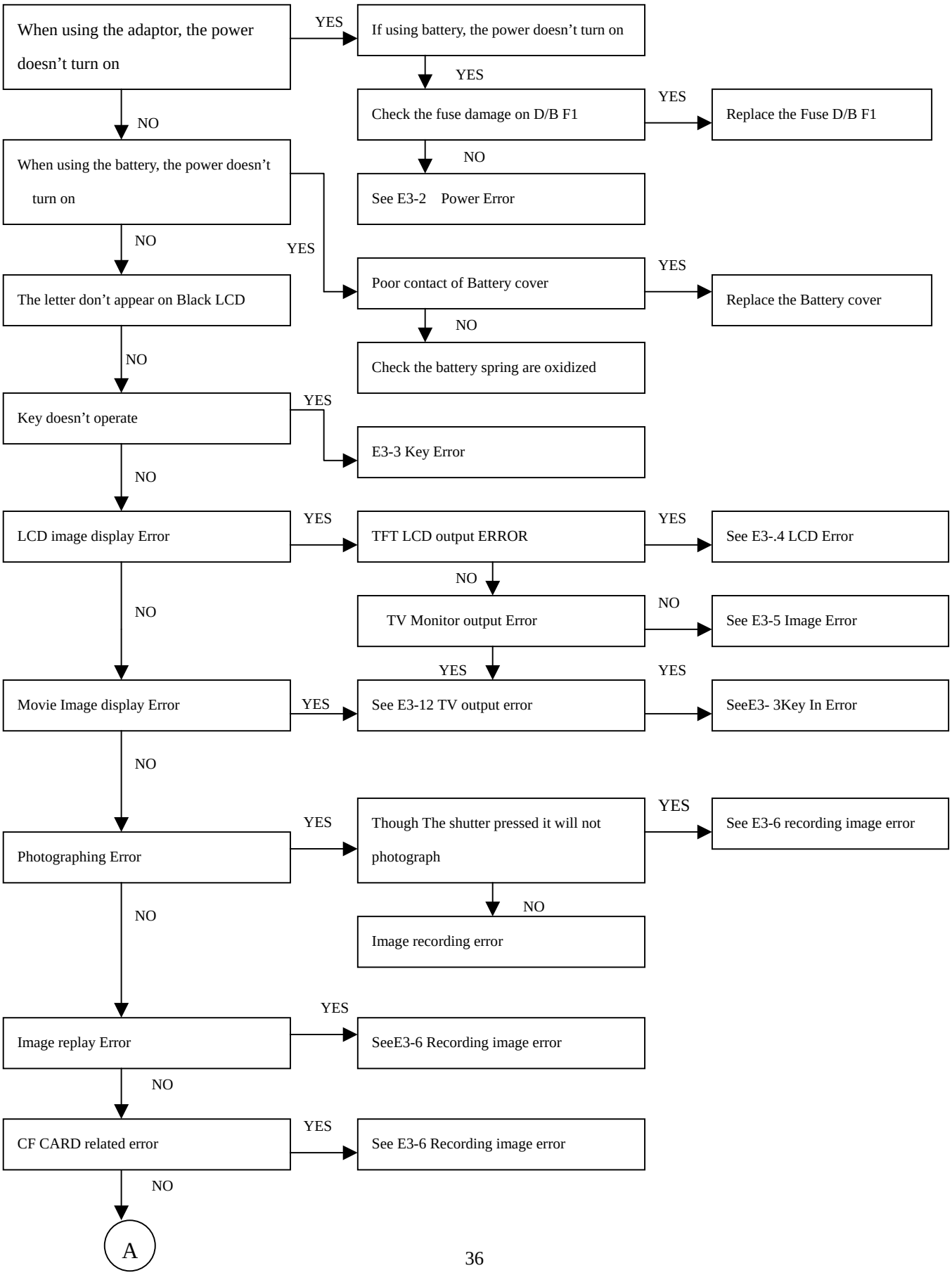

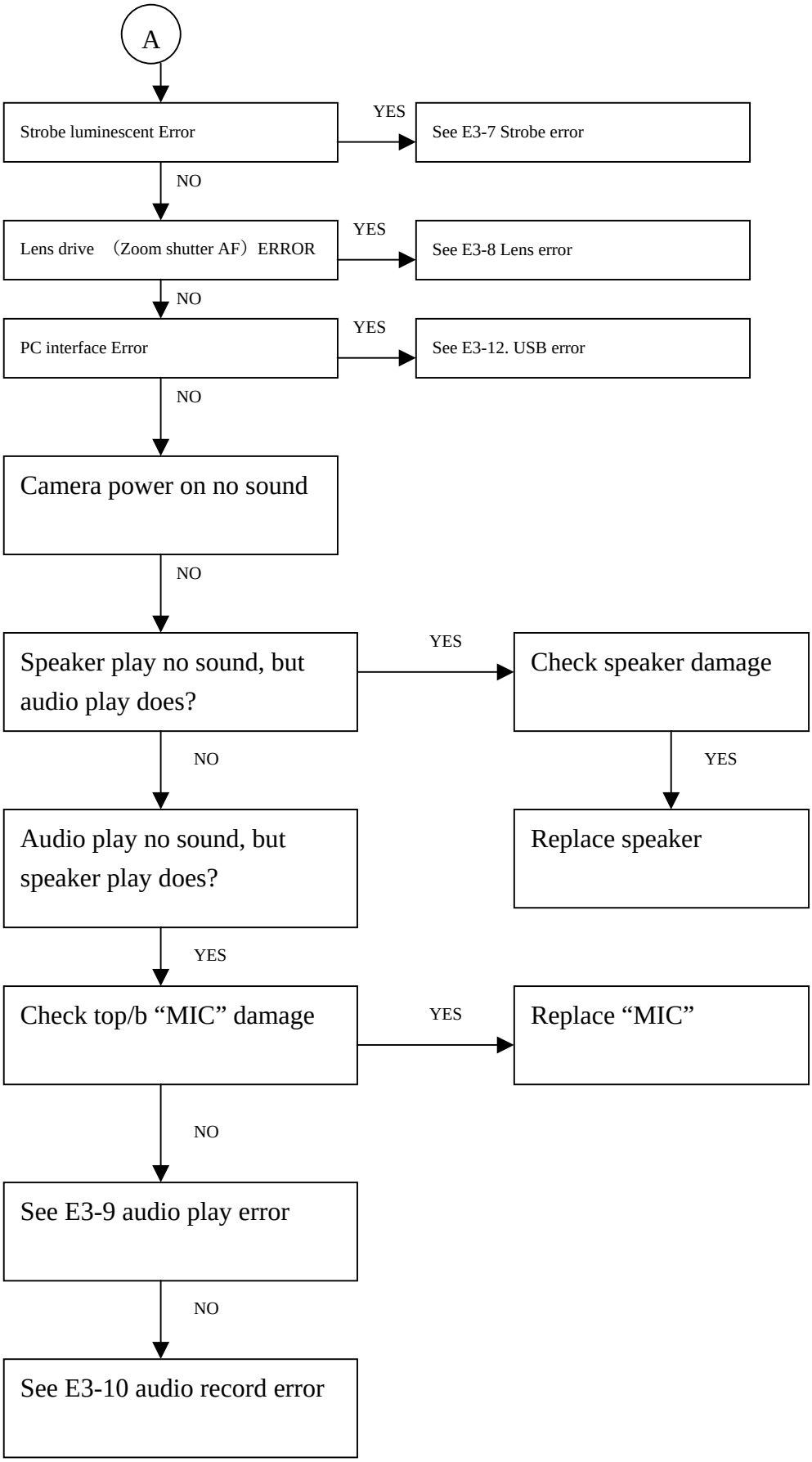
A
Strobe luminescent Error
YES
See E3-7 Strobe error
NO
Lens drive （Zoom shutter AF）ERROR
YES
See E3-8 Lens error
NO
PC interface Error
YES
See E3-12. USB error
NO
Camera power on no sound
NO
Speaker play no sound, but audio play does?
YES
Check speaker damage
NO
YES
Audio play no sound, but speaker play does?
Replace speaker
YES
Check top/b “MIC” damage
YES
Replace “MIC”
NO
See E3-9 audio play error
NO
See E3-10 audio record error

E.3-2 POWER ERROR

E3-2.1 POWER DOES NOT TURN ON

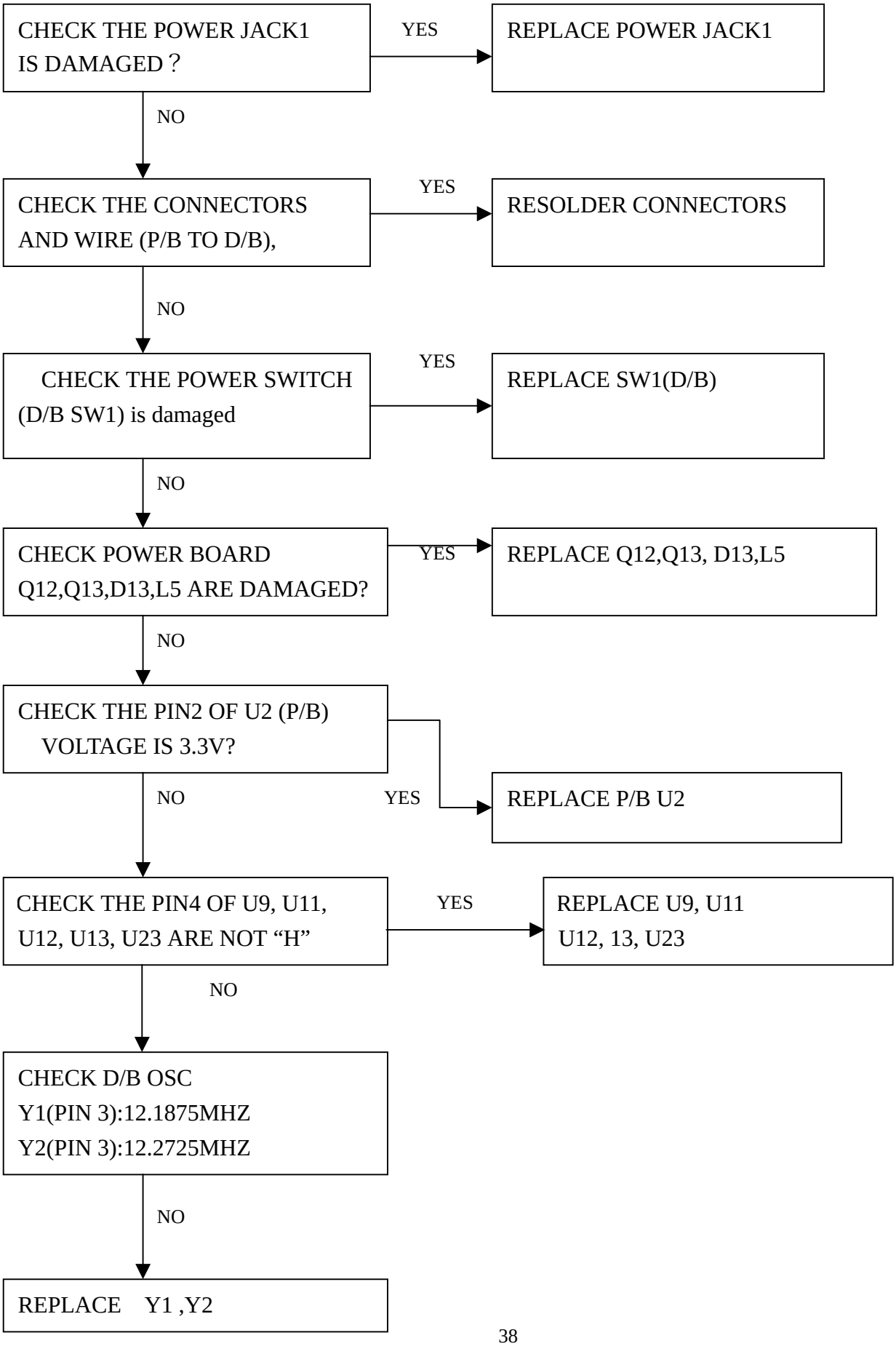

E.3-2.2 CCD POWER OUTPUT ERROR

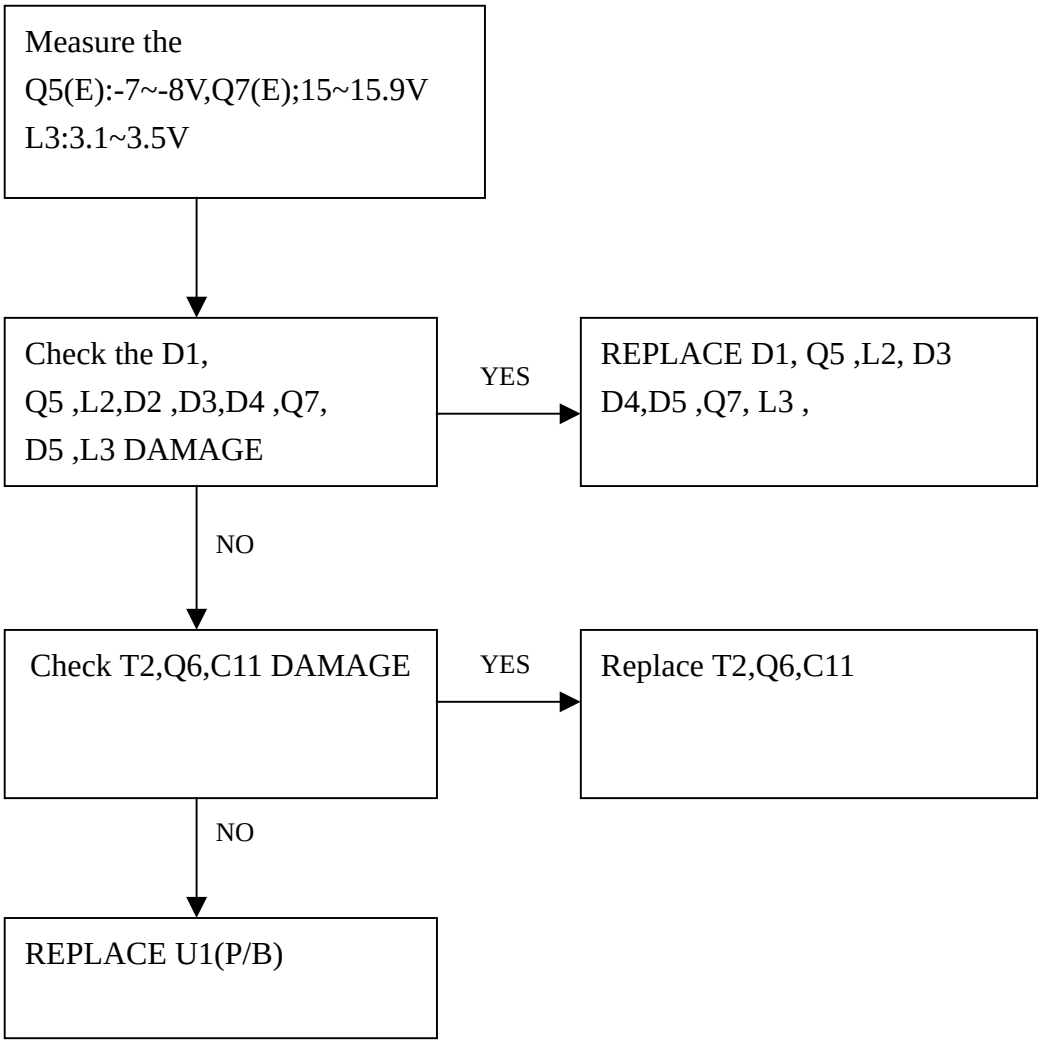

E.3-2.3 LCD POWER OUTPUT ERROR

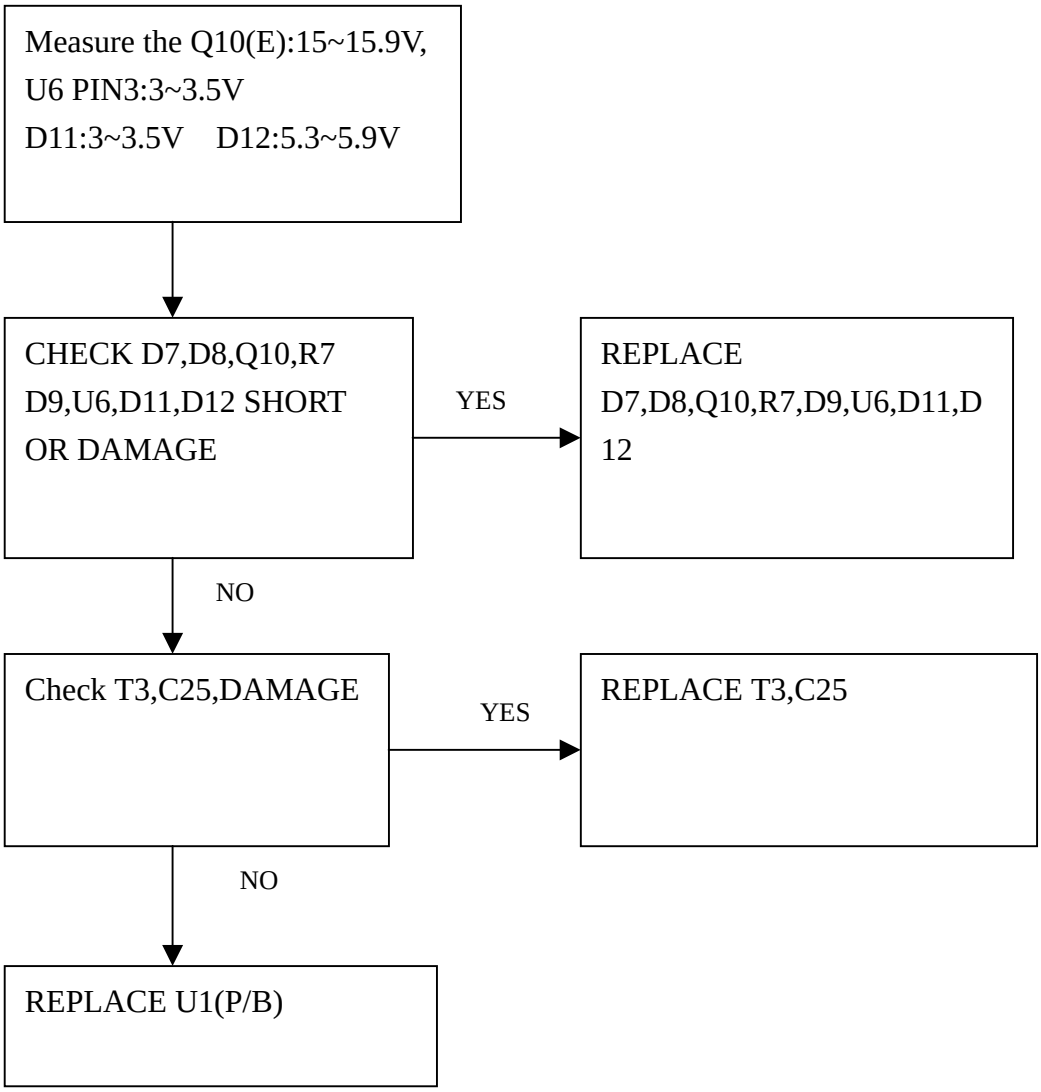

E.3-3.KEY IN ERROR

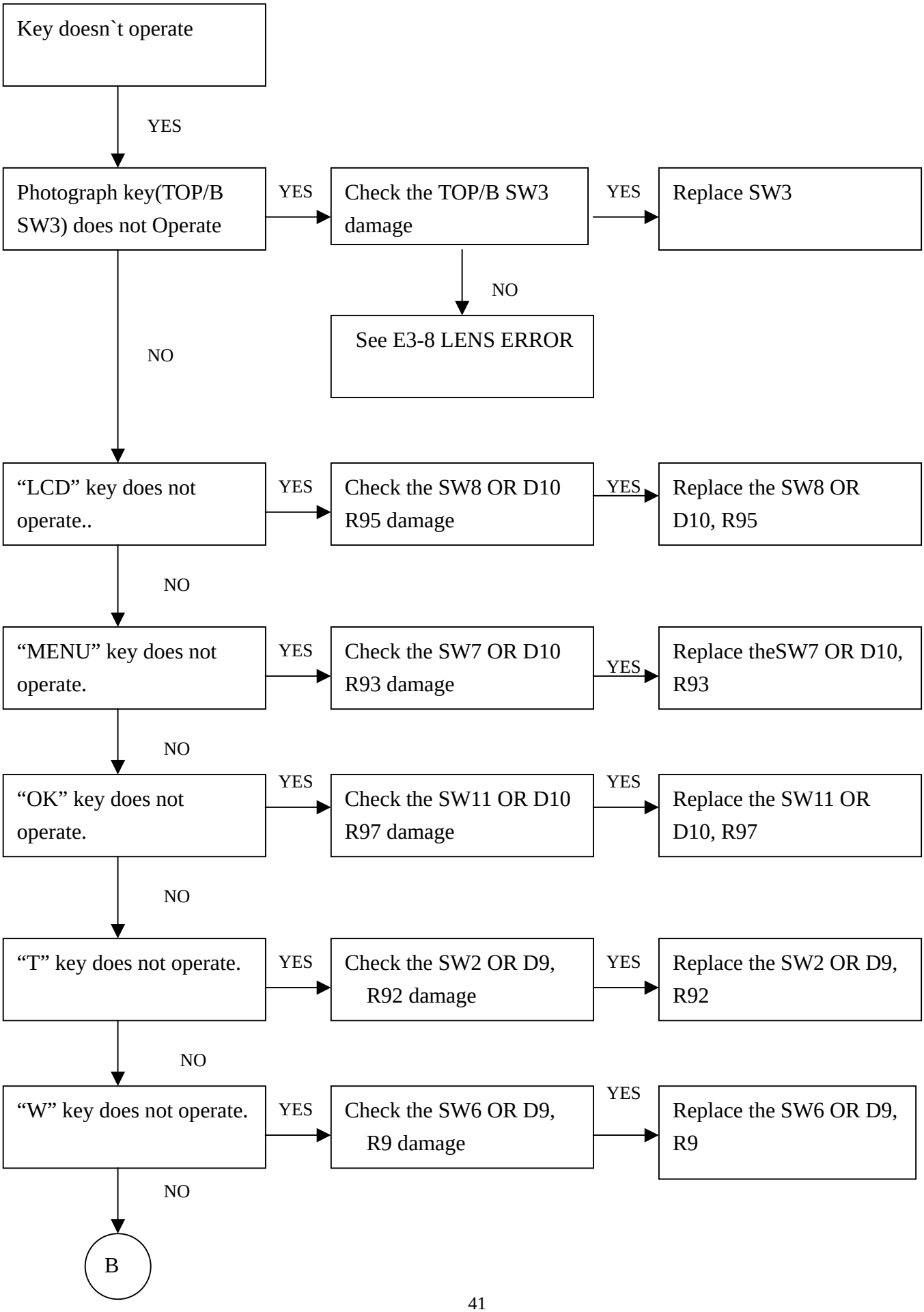

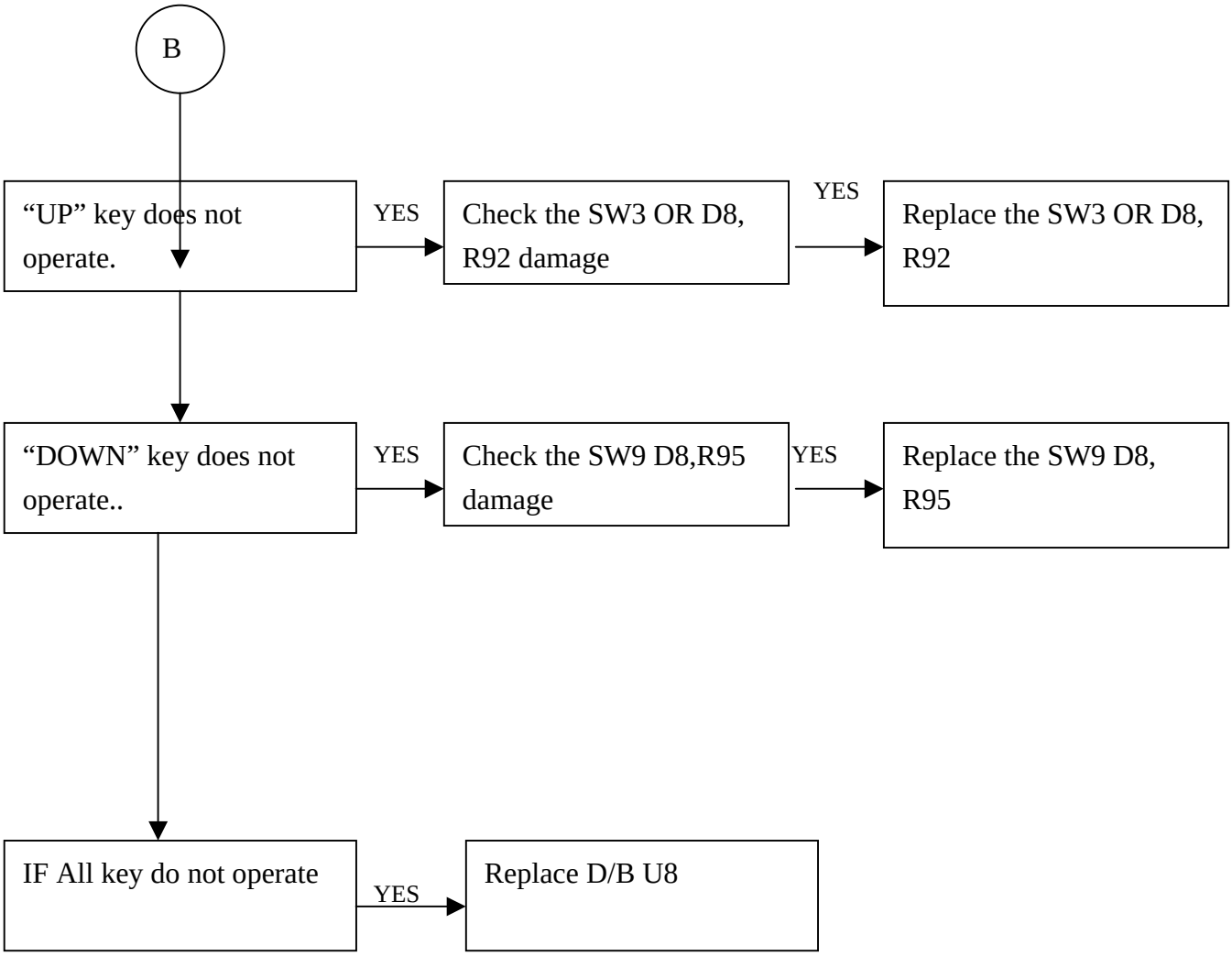
B
“UP” key does not operate.
YES
Check the SW3 OR D8, R92 damage
YES
Replace the SW3 OR D8, R92
“DOWN” key does not operate..
YES
Check the SW9 D8,R95 damage
YES
Replace the SW9 D8, R95
IF All key do not operate
YES
Replace D/B U8

E.3-4.1 TFT LCD ERROR

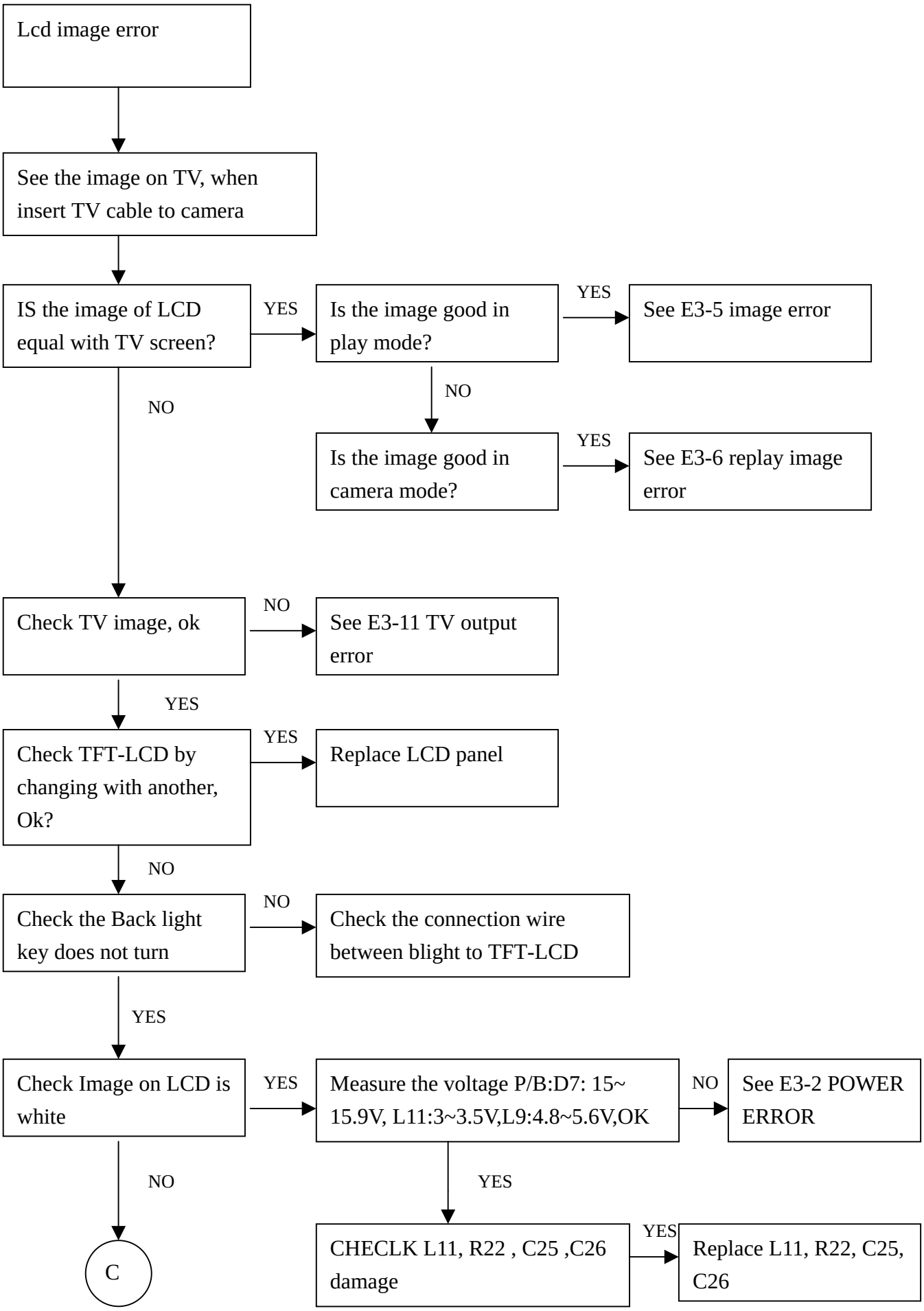

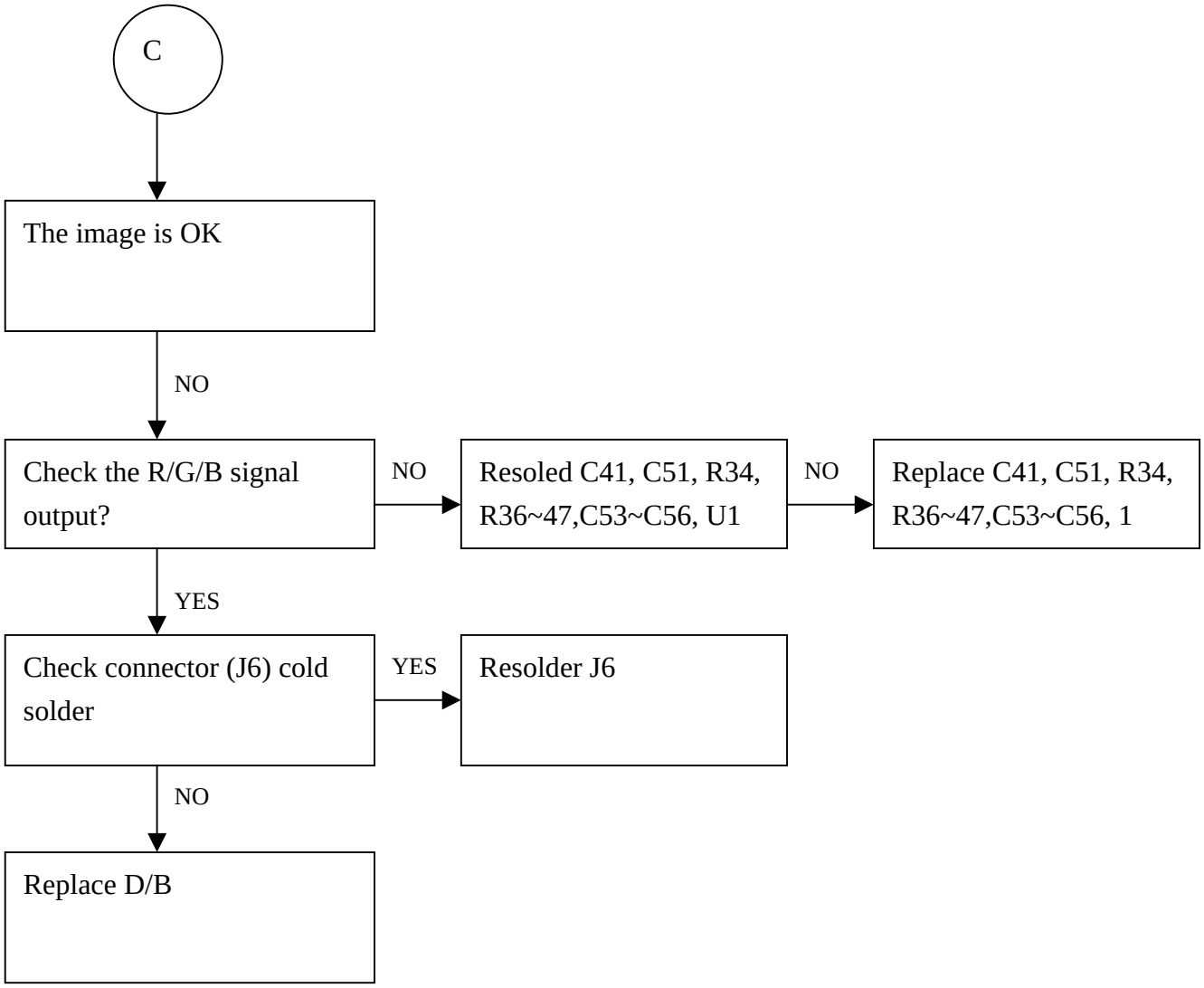
C
The image is OK
NO
Check the R/G/B signal output?
NO
Resoled C41, C51, R34, R36~47,C53~C56, U1
NO
Replace C41, C51, R34, R36~47,C53~C56, 1
YES
Check connector (J6) cold solder
YES
Resolder J6
NO
Replace D/B

E.3-4.2 Backlight Output Error

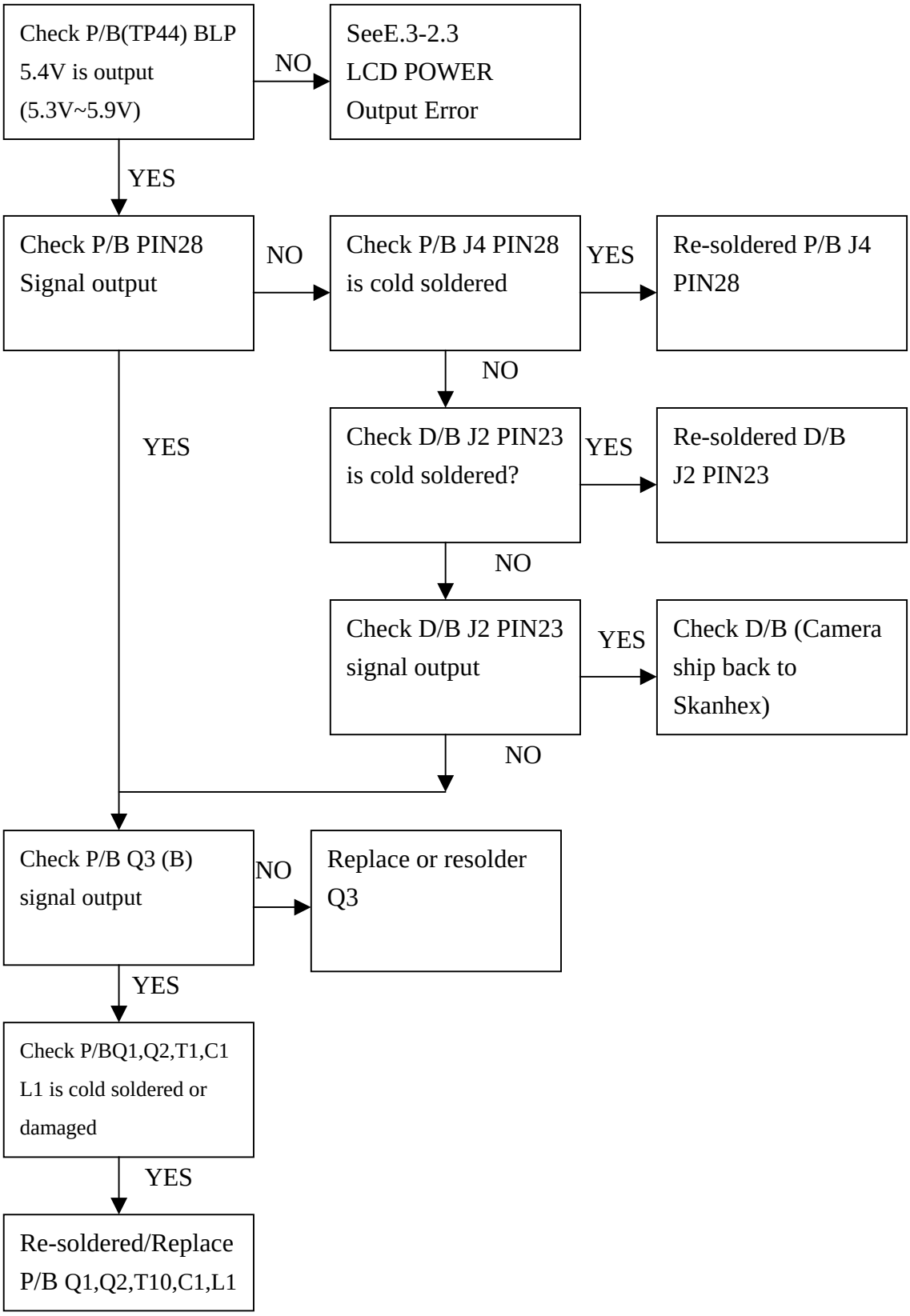

E.3-5 IMAGE ERROR

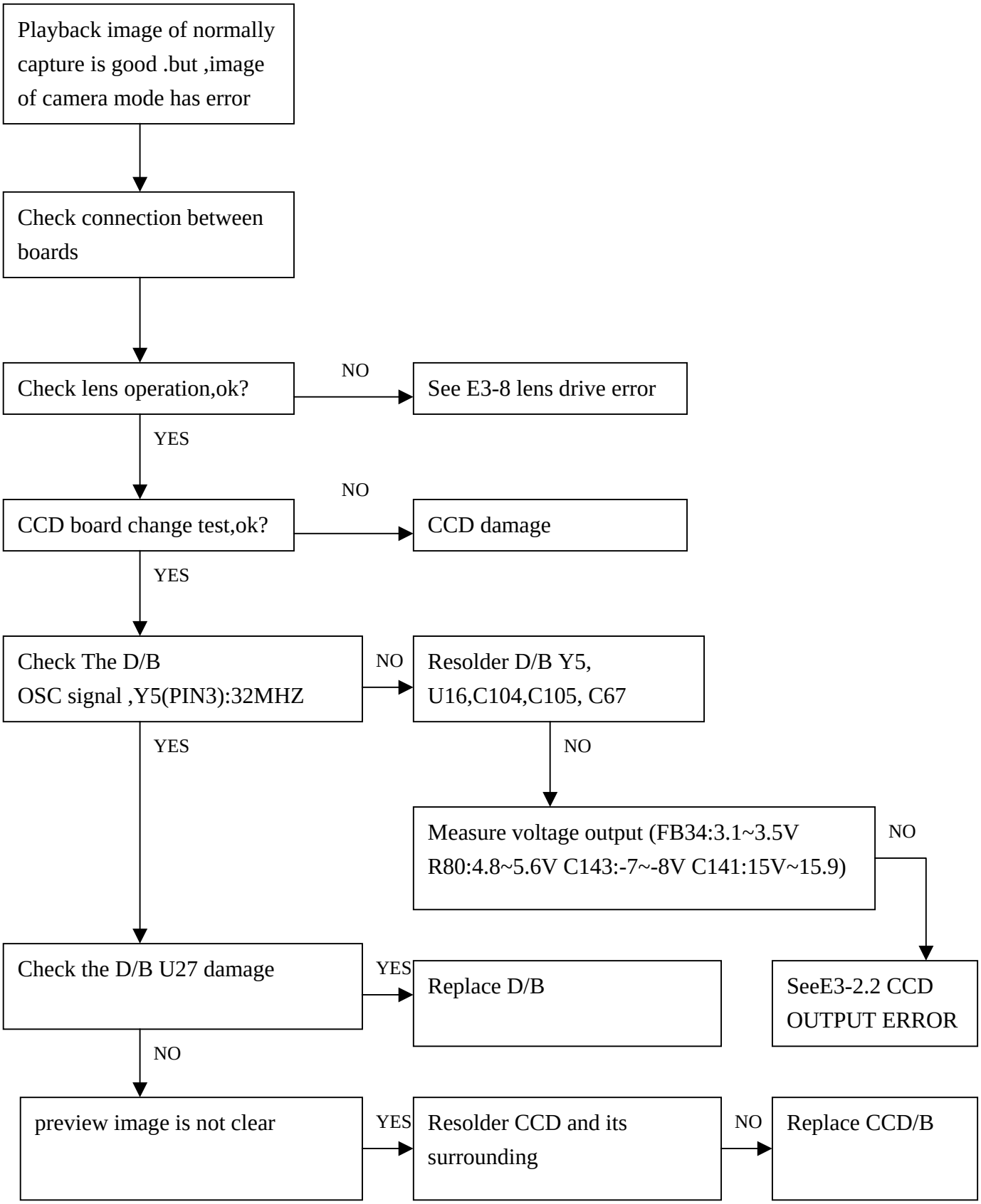

E.3-6 Recording Image Error

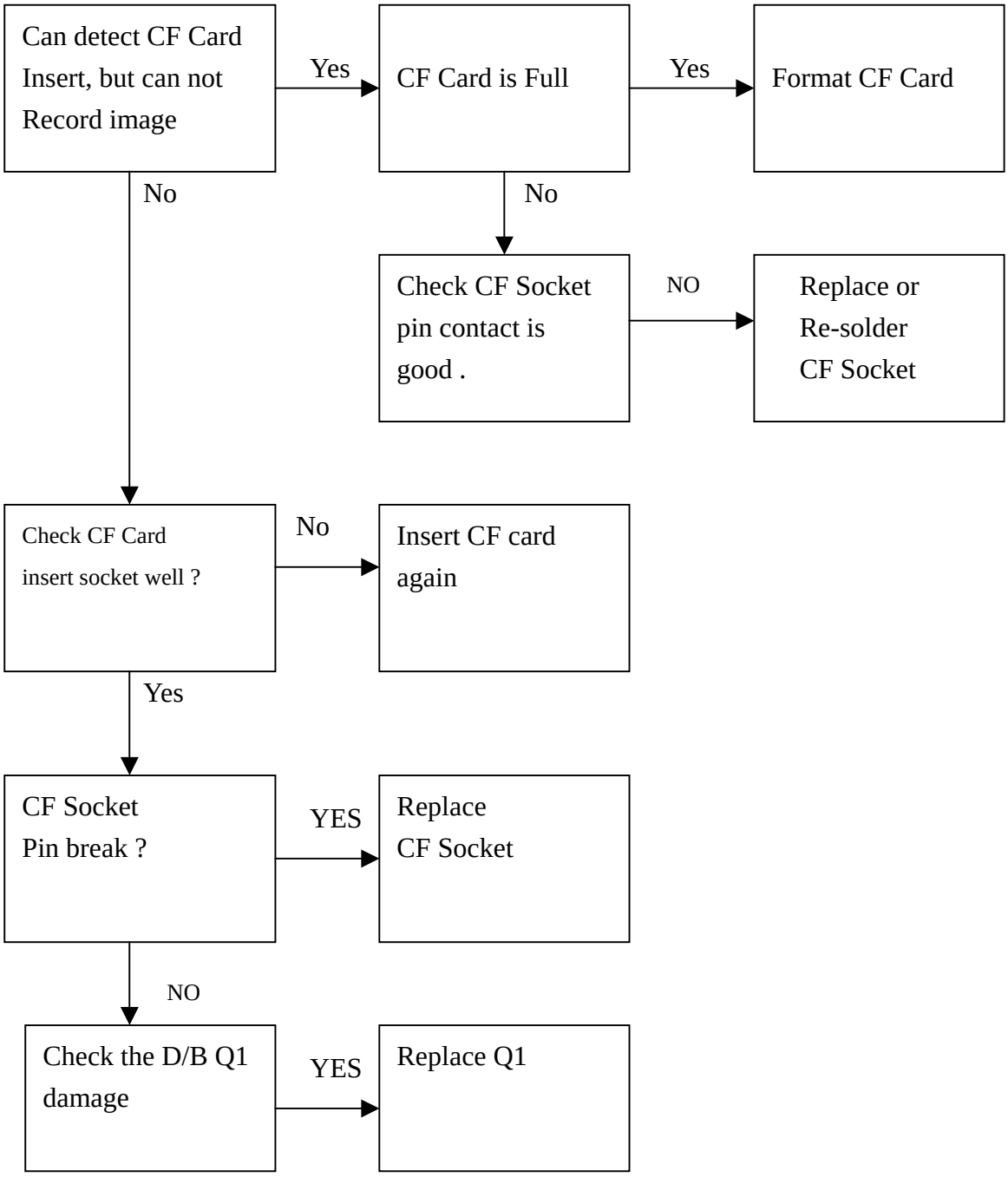

E.3-7 Strobe Error

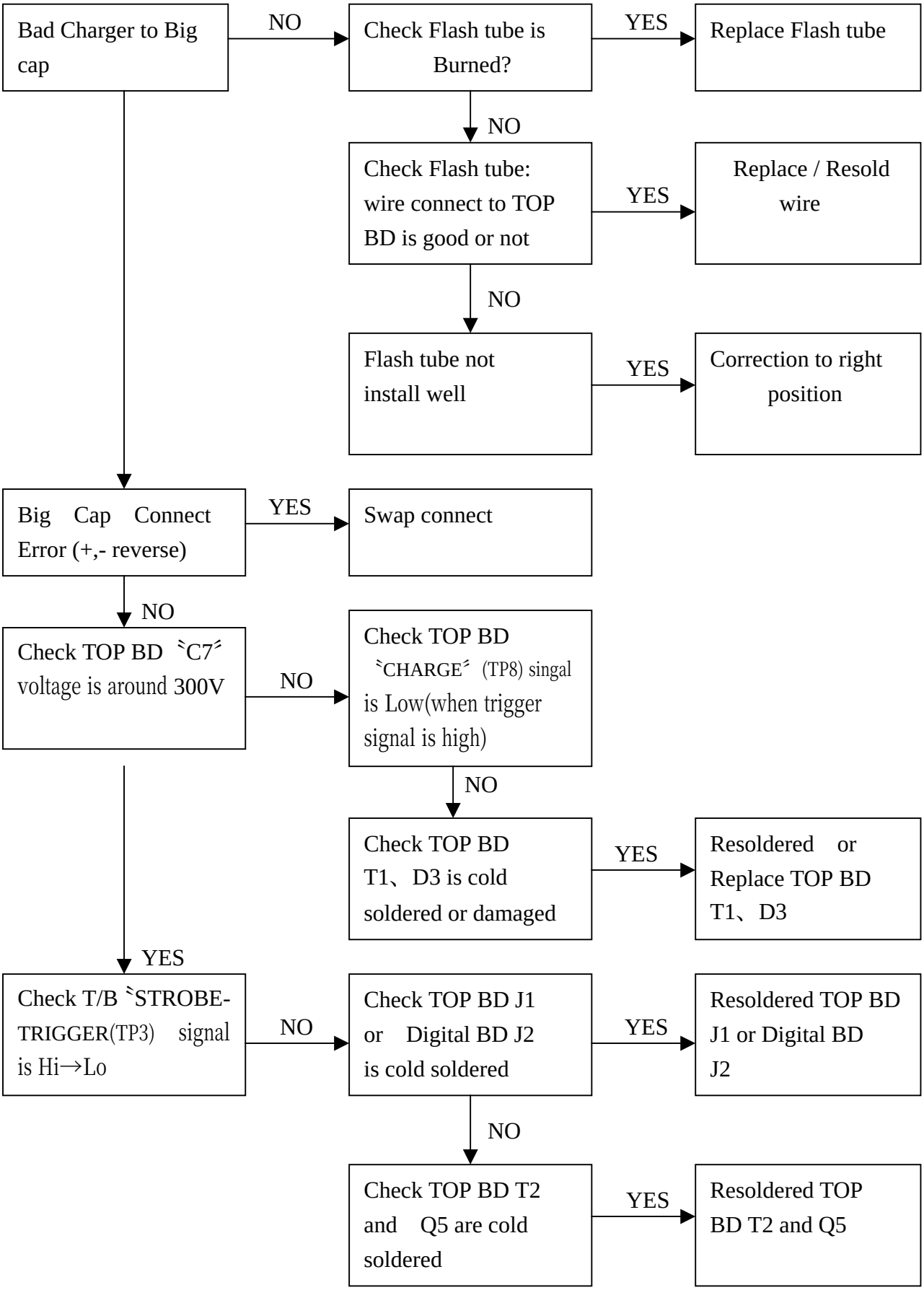

E.3-8 LENS DRIVER ERROR

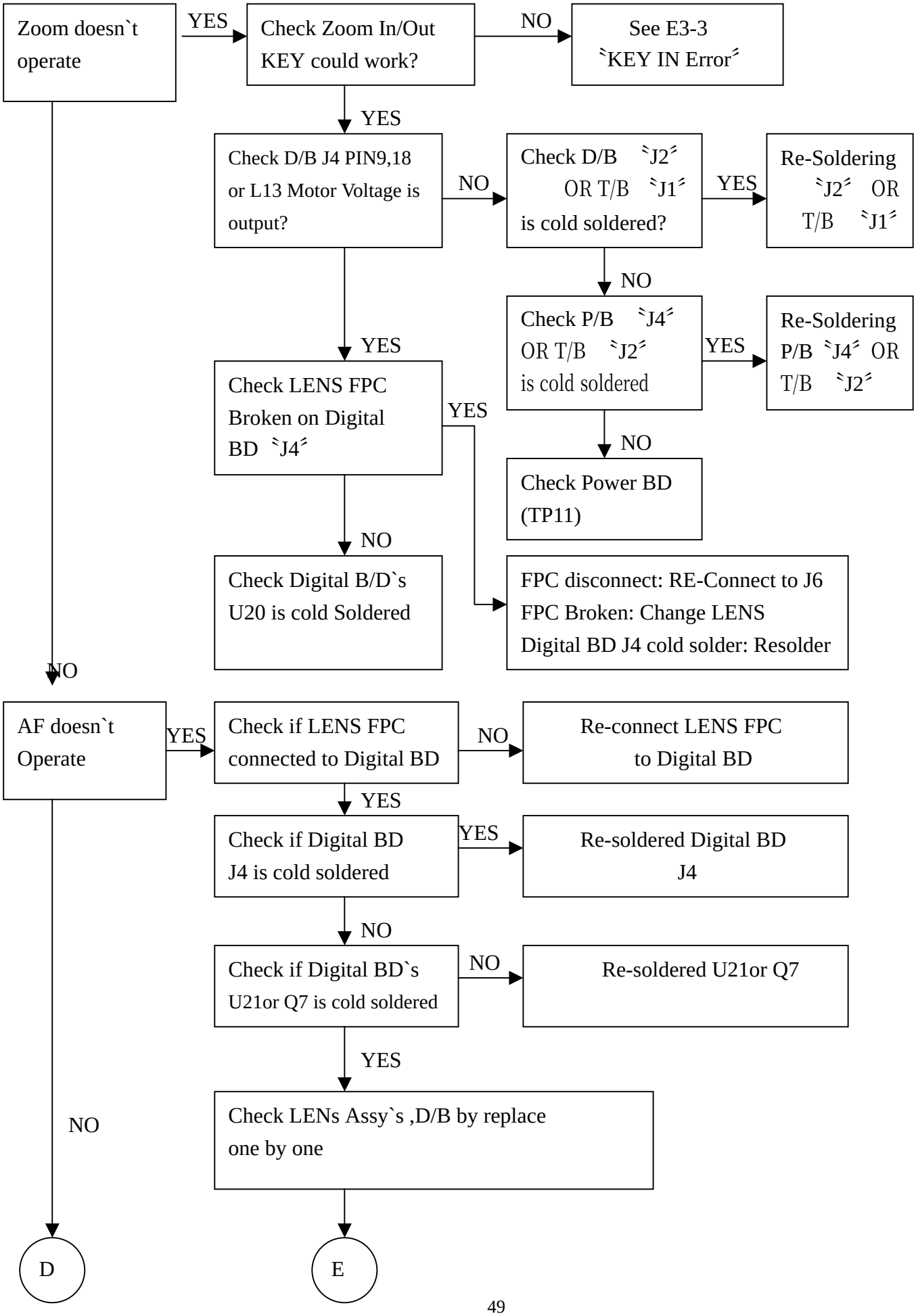

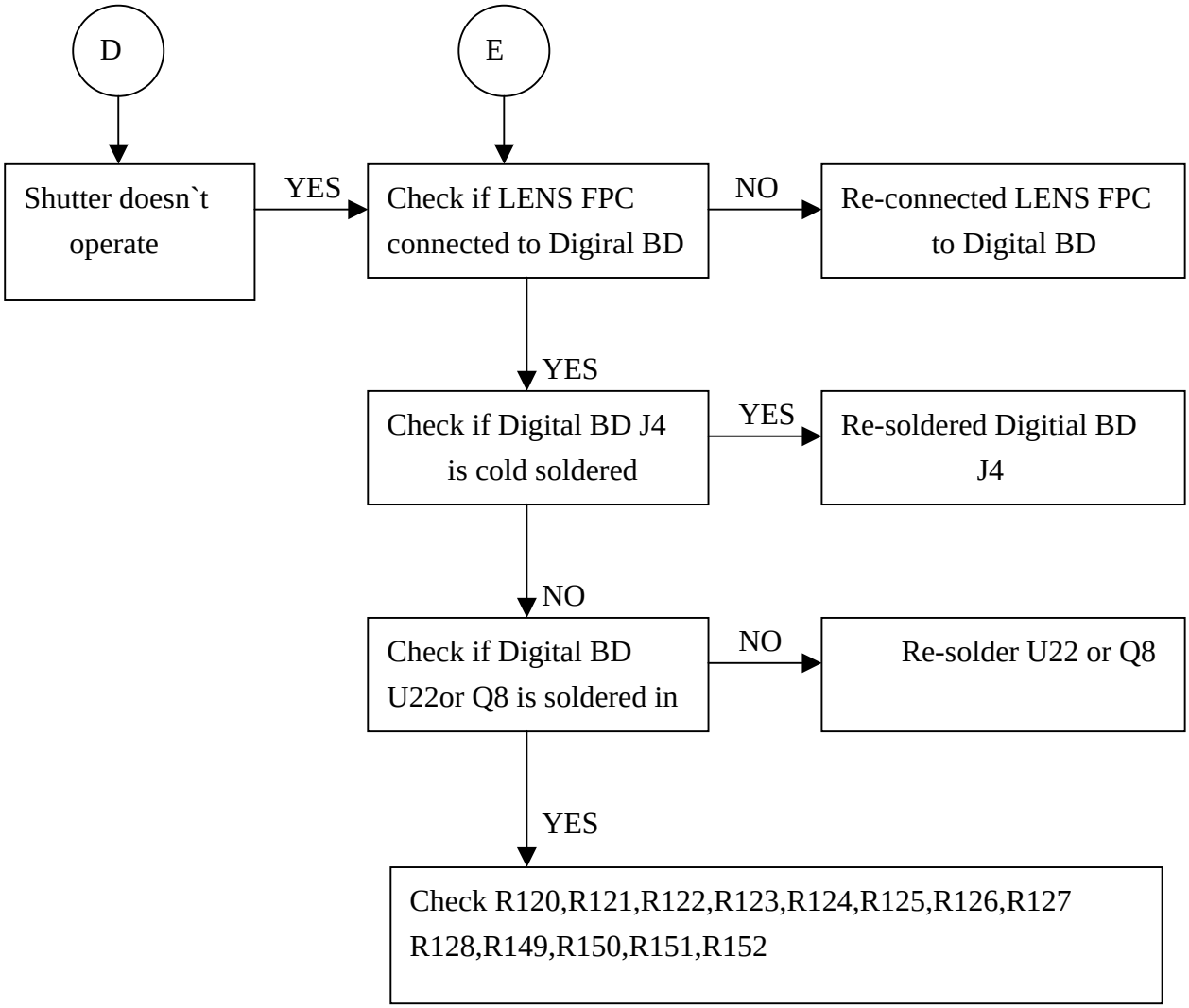
D
E
Shutter doesn`t operate
YES
Check if LENS FPC connected to Digiral BD
NO
Re-connected LENS FPC to Digital BD
YES
Check if Digital BD J4 is cold soldered
YES
Re-soldered Digitial BD J4
NO
Check if Digital BD U22or Q8 is soldered in
NO
Re-solder U22 or Q8
YES
Check R120,R121,R122,R123,R124,R125,R126,R127 R128,R149,R150,R151,R152

E.3-9 AUDIO PLAY ERROR

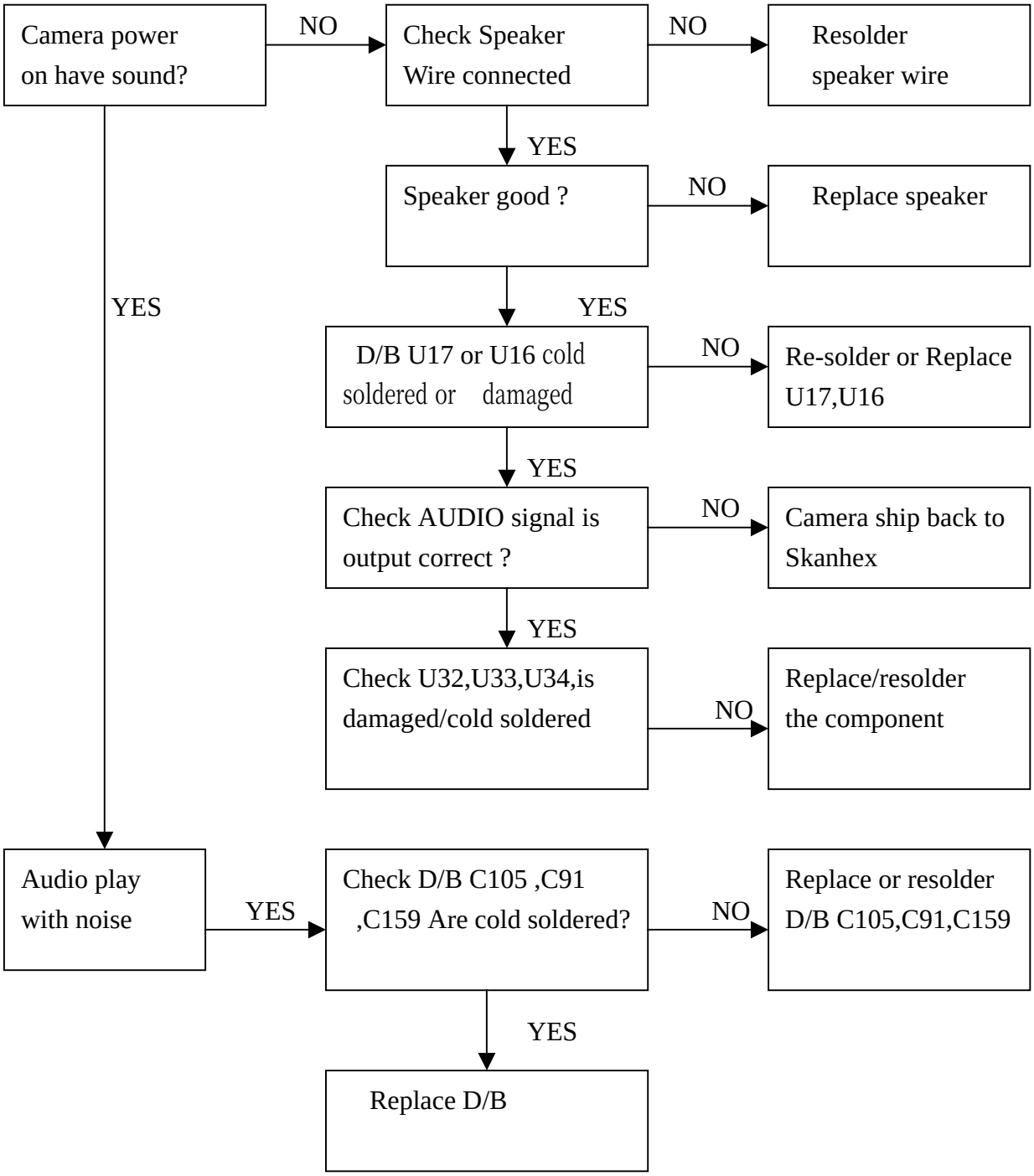

E.3-10 Audio record Error

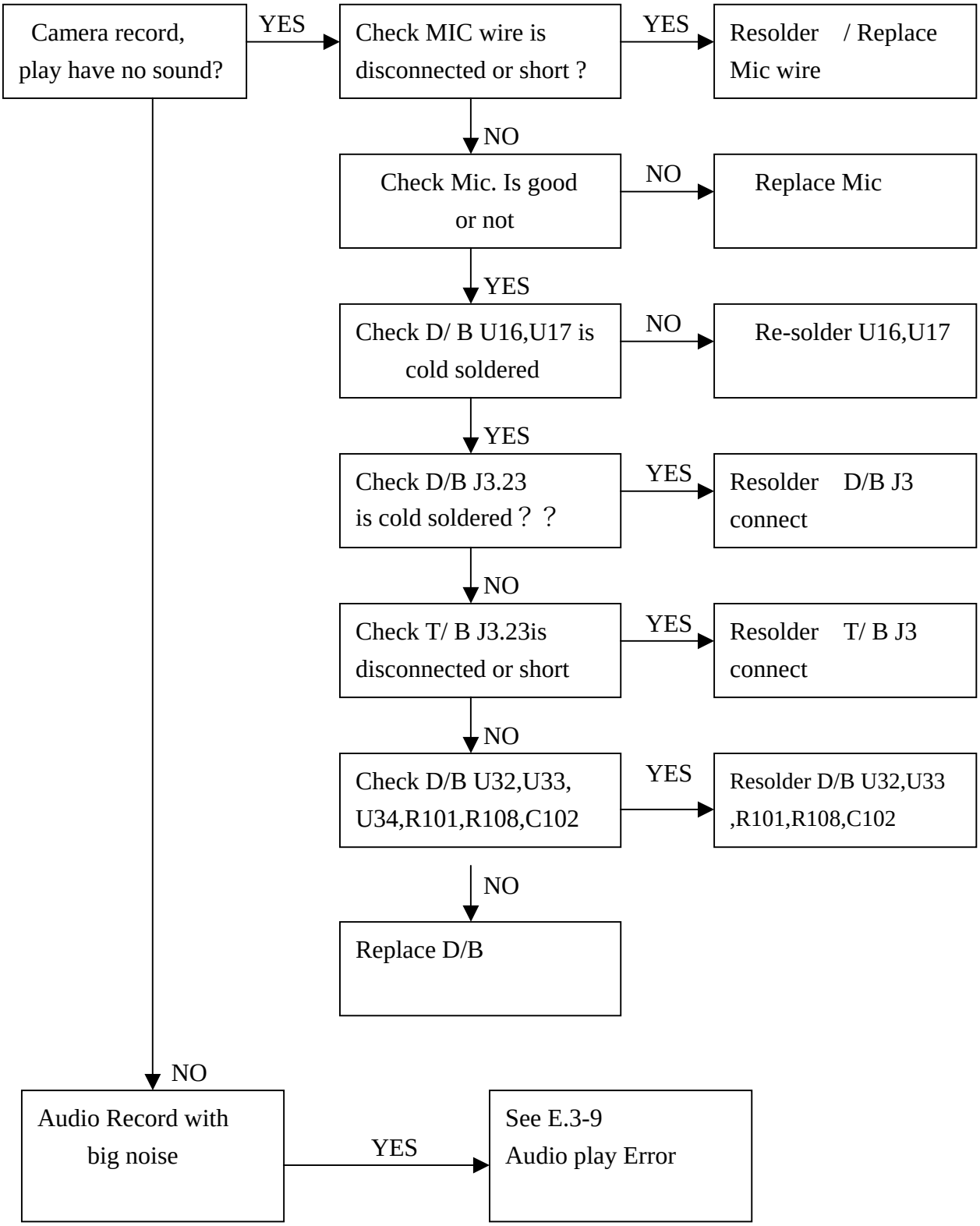

E.3-11TV Output Error

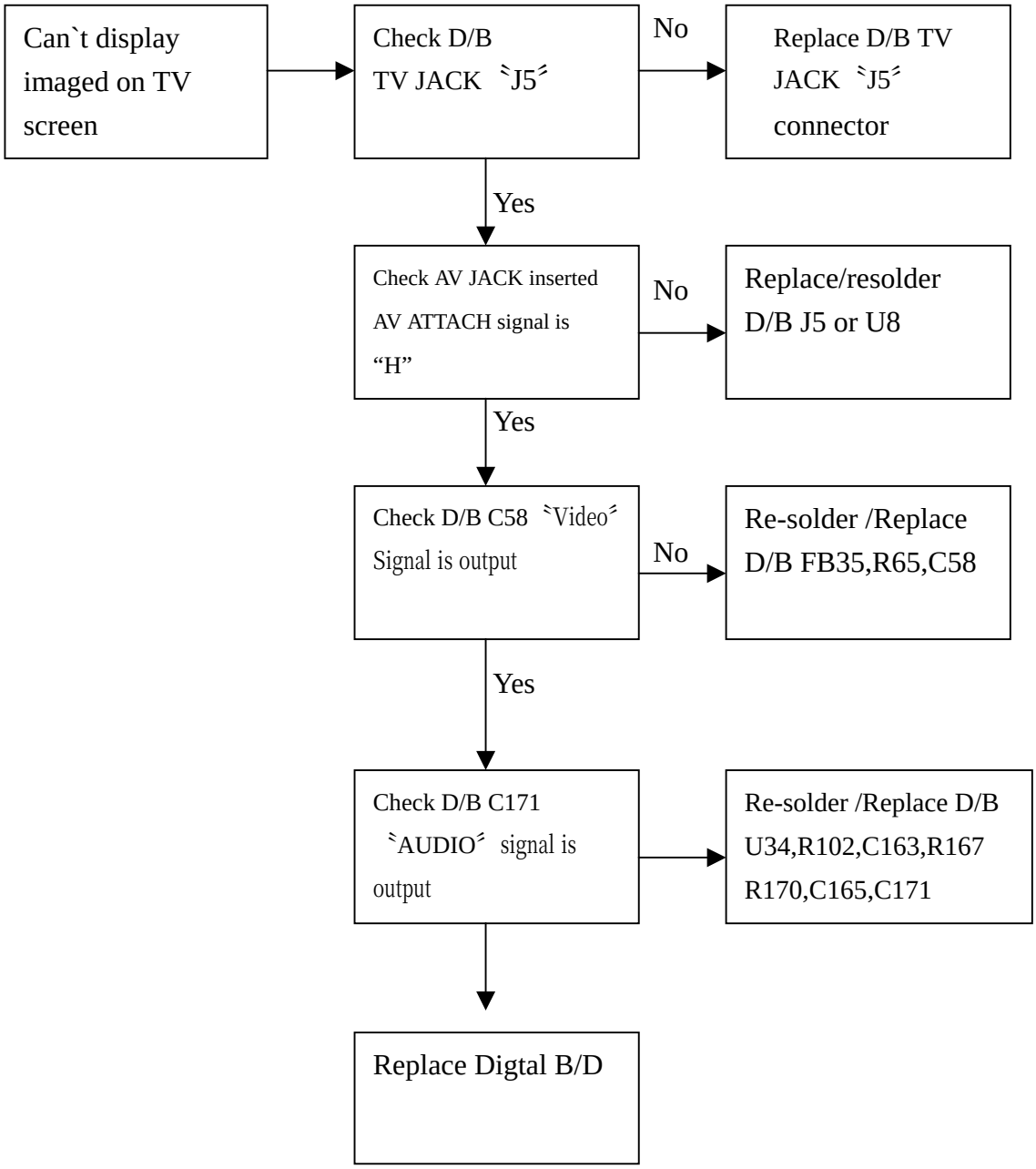

E.3-12 USB ERROR

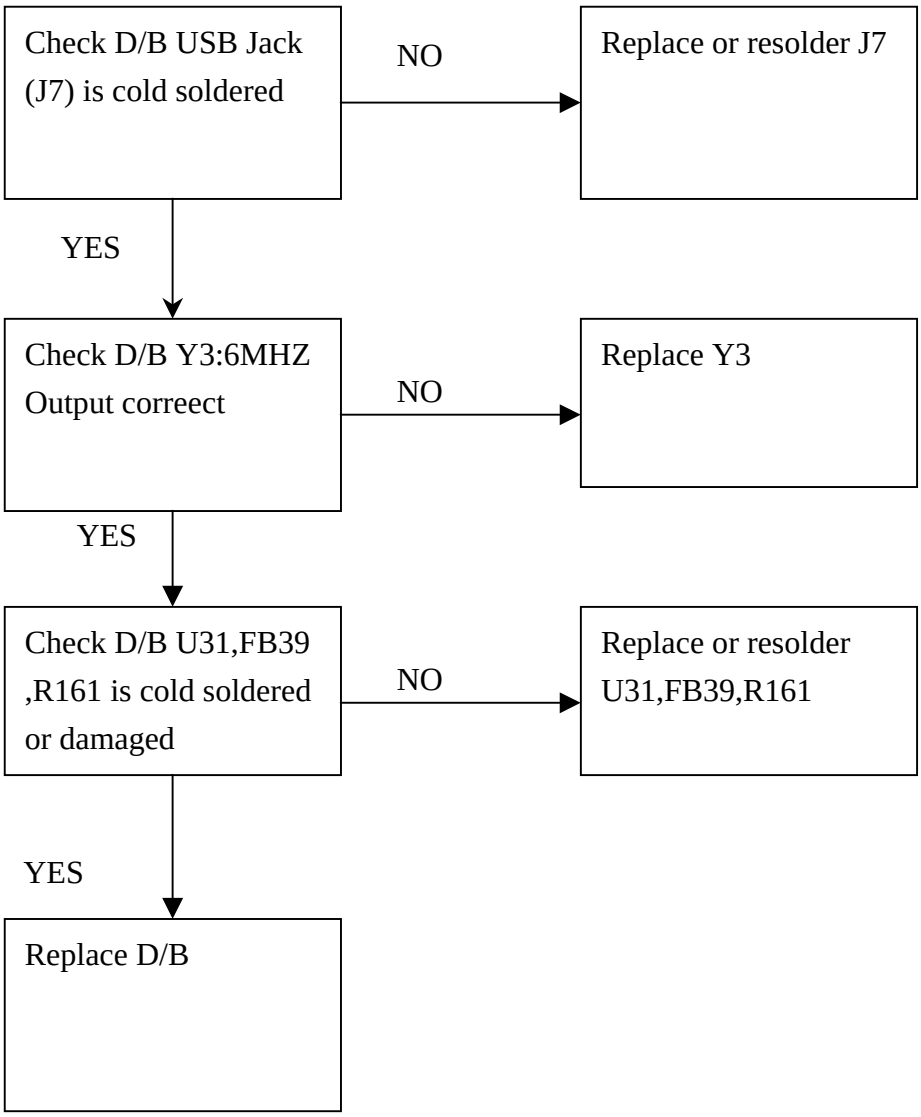

▣ Block Diagram of Digimax 230/340/410 ▣

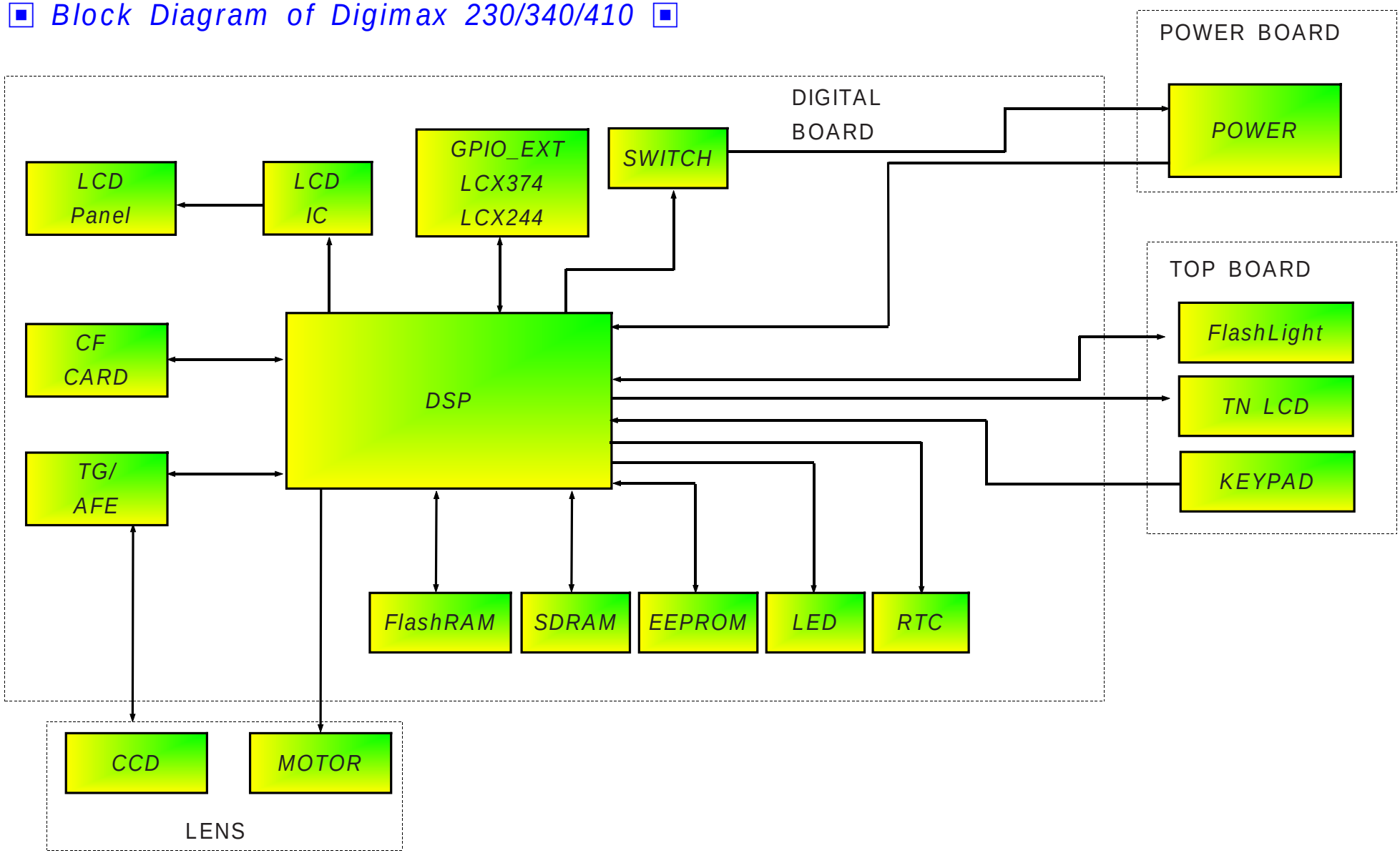

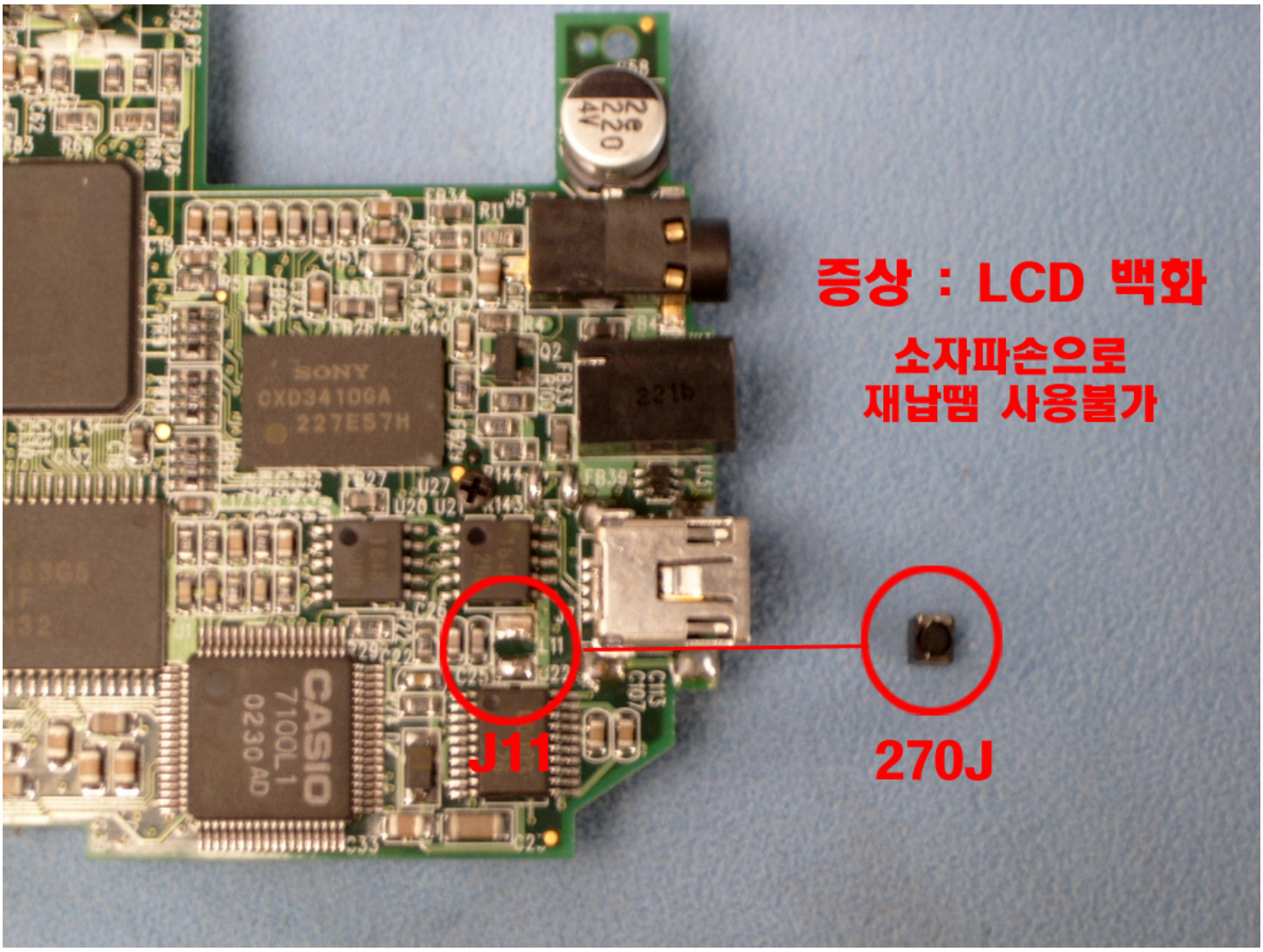
증상 : LCD 백화
소자파손으로
재납땜 사용불가
J11
270J
SONY
CXD3410GA
227E57M
CASIO
7100L1
0230 AD